Security-Constrained Unit Commitment Considering Wind Farms

S. M. Ezzati
Electrical Engineering Department
Islamic Azad University Saveh Branch, Saveh, Iran
ezzati_seyedmeisam@ieee.org

G. R. Yousefi
Department of Electrical and Computer Engineering, Isfahan University of Technology, 84156-83111, Isfahan, Iran
yousefi@cc.iut.ac.ir

M. M. Pedram
Computer Engineering. Department
Faculty of Engineering, Tarbiat Moallem University, Karaj/Tehran, Iran
pedram@tmu.ac.ir

***Abstract*— This paper presents a formulation of security constrained unit commitment (SCUC) with emphasizing on wind farm. In past years, a fast growth in development of wind generation has been experienced in power system. The problem is finding a solution which satisfies the constraints and maximizes the objective function. The proposed model is solved using a standard Mixed Integer Nonlinear Programming (MINLP) solver. Case studies with the eight-bus system are presented in detail in this paper.**

Keywords-- Mixed Integer Nonlinear Programming (MINLP), Security-Constrained Unit Commitment (SCUC), Wind Farm.

I. INTRODUCTION

Due to general interest in renewable and green energy, wind generation has grown substantially, and additional growth is projected. In recent years, a fast growth of installed wind power capacities has been experienced all over the world. Integration of wind resources into the power system brings new challenges to the operation and control of power systems. Wind and other green sources are not always available, so conventional sources must supply the load demand in the quiescent periods of renewable sources. Wind variability confronts the operator with the technical problems of matching the load to the available power and protecting the wind turbine generator from gales. Wind is not a concentrated source of energy. Potential problems also revolve around the possibility of no wind or wind generation at peak hours and full generation during light load hours [1].

If any renewable unit is to be integrated into any power system it needs to be considered at unit commitment (UC) problem in the system to evaluate the effect of injecting power through renewable units on the whole network and to calculate the total energy production cost with respect to several objectives, cost, emission and security [2], [3].

While in new power markets the financial aspect is one of the most important objects in power generation scheduling, the secure operation of the system is essential. Therefore in the competitive electricity markets a centralized Security Constrained Unit Commitment (SCUC) determines the generation schedule. SCUC provides a financially viable UC that is physically feasible.

Decomposition of the problem is a good simplification technique to divide the main complex problem of SCUC into a master problem (UC) and network security check subproblems [4], [5]. This paper shows the advantages of benders decomposition technique to solve the SCUC problem in a new deregulated power system environment. On the other hand, in this paper a Mixed Integer Non-Linear Programming (MINLP) is used for unit commitment scheduling and is applied to solve subproblems, while wind farms are considered.

For the proposed problem, master problem includes UC which can be formulated without considering reactive power generation and network constraints. The objective is to minimize the cost of supplying the load [6], [7].

Constraints on transmission lines capacity and bus voltages magnitude, due to reactive power generation limits, are considered and met in sub-problems [6], [7]. A power flow problem will be solved to check the system constraints. It is necessary to mention that this paper presents a formulation of SCUC problem with emphasizing on the wind farms.

Authors used solvers in Generalized Algebraic Modeling System (GAMS). GAMS is a high-level modeling system for mathematical programming problems and modeling linear, nonlinear and mixed integer optimization problems. The method is tested on an 8-bus and successfully

II. SCUC FORMULATION

The objective of SCUC discussed in this paper is to obtain an UC scheduling at minimum production cost without compromising the system reliability. The reliability of the system is interpreted as satisfying two functions: adequacy

and security. In several power markets, the ISO plans the day-ahead schedule using SCUC.

SCUC decomposes the scheduling formulation into a master problem (UC) and a sub-problem based on the Benders decomposition. Sub-problem contains two sub-systems that corresponding to transmission and voltage constraints [1].

The objective function is given as:

$$Min\sum_{i=1}^{N_g}\sum_{t=1}^{N_t}\left[C_i\left(P(i,t)\right)I(i,t)+SU(i,t)+SD(i,t)\right] \quad (1)$$

Where $P(i,t)$ is generation of unit i at time t, N_t Number of hours for the scheduling period, t is time index, N_g is Number of units, i is unit index, $I(i,t)$ is commitment state of unit i at time t, $C_i(P(i,t))$ is operating cost which is calculated as the product of the heat rate (MBTU/h) and the unit fuel cost (\$/MBTU). $SD(i,t)$ is shut-down cost, which is generally constant, $SU(i,t)$ represents the start-up cost of the units which depends on the length of time that the unit had been off. The start-up cost is defined as:

$$SU(i,t)=I(i,t)\left[1-I(i,t-1)\right] \times\left[\alpha_i+\beta_i\left(1-\exp\frac{-X^{off}(i,t)}{\tau_i}\right)\right] \quad (2)$$

Where a_i is integrated labor starting-up cost and equipment maintenance cost of unit i, β_i is starting-up cost of unit i from cold conditions, $X^{off}(i,t)$ is time duration for which unit i has been OFF at time t, τ_i is time constant that characterizes unit i cooling speed.

The prevailing constraints are as follows:

- System Real power Balance

$$\sum_{i=1}^{N_g}P(i,t)I(i,t)=P_D(t) \quad (3)$$

Where $P_D(t)$ is Total system real power load demand at time t

- System Spinning Reserve Requirements

$$\sum_{i=1}^{N_g}r_s(i,t)I(i,t)\geq R_s(t) \quad t=1,\ldots,N_t \quad (4)$$

Where $r_s(i,t)$ is contribution of unit i to spinning reserve at time t, $R_s(t)$ is System spinning reserve requirement at time t.

- System Operating Reserve Requirements

$$\sum_{i=1}^{N_g}r_o(i,t)I(i,t)\geq R_o(t) \quad t=1,\ldots,N_t \quad (5)$$

Where $r_o(i,t)$ is contribution of unit i in operating reserve at time t and $R_o(t)$ is required system operating reserve at time t.

- Unit Generation Limits

$$P_{g\min}(i)\leq P(i,t)\leq P_{g\max}(i) \quad i=1,\ldots,N_g \quad t=1,\ldots,N_t \quad (6)$$

Where $P_{g\min}(i)$ is minimum generation of unit i, $P_{g\max}(i)$ is maximum generation of unit i.

- Thermal Unit Minimum Starting Up/Down Times

$$\left[X^{on}(i,t-1)-T^{on}(i)\right]\times\left[I(i,t-1)-I(i,t)\right] \quad (7)$$

$$\left[X^{off}(i,t-1)-T^{off}(i)\right]\times\left[I(i,t)-I(i,t-1)\right] \quad (8)$$

Where $X^{on}(i,t)$ is time duration for which unit i has been ON at time t, $X^{off}(i,t)$ is time duration for which unit i has been OFF at time t, $T^{on}(i)$ is minimum ON time of unit i, $T^{off}(i)$ is minimum OFF time of unit i.

- Ramp rate Constraints

$$P(i,t)-P(i,t-1)\leq UR(i) \quad (9)$$

$$P(i,t)-P(i,t-1)\leq DR(i) \quad (10)$$

Where $UR(i)$ is Ramp-up rate limit of unit I, $DR(i)$ is ramp-down rate limit of unit i.

- Transmission Flow Limit from Bus k to Bus m

$$-P_{km}^{\max}\leq P_{km}(t)=f\left(P(t),\varphi(t)\right)\leq P_{km}^{\max} \quad t=1,\ldots,N_t \quad (11)$$

Where $P_{km}^{\max}$ is upper limit for power flow of line k–m, $P_{km}(t)$ is power flow of line k–m, $\varphi(t)$ is phase shifter control vector at time t, $P(t)$ is real power generation vector.

- Reactive Power Operating Reserve Requirement

$$\sum_{i=1}^{N_g}Q_{g\max}(i)I(i,t)\geq Q_D(t) \quad t=1,\ldots,N_t \quad (12)$$

Where $Q_D(t)$ is total system reactive power load demand at time t, $Q_{g\max}(i)$ is maximum reactive power unit i can provide.

- Reactive Power Generation Limits and Load Bus Balance

$$Q_G^{\min}I(t)\leq Q_G(t)=F_1(V)\leq Q_G^{\max}I(t) \quad t=1,\ldots,N_t \quad (13)$$

Where $Q_G^{\min}$ is reactive power generation vector lower limit at time t, $Q_G(t)$ is reactive power generation vector at time t, $F_1(V)$ is reactive power function of V for units, $Q_G^{\max}$ is Reactive power generation vector upper limit at time t.

- System Voltage and Transformer Tap Limits

$$V^{\min}\leq V\leq V^{\max} \quad (14)$$

$$T^{\min}\leq T\leq T^{\max} \quad (15)$$

Where V is system voltage vector, $V^{\min}$ is system voltage lower limit vector, $V^{\max}$ is system voltage upper limit vector, T is transformer tap vector, $T^{\min}$ is transformer tap lower limit vector, $T^{\max}$ is transformer tap upper limit vector.

• Expected Unserved Energy (EUE) Limits

$$E\left\{\sum_{j=1}^{N_b} r_{jt}\right\} \le \varepsilon_t \quad t = 1,\ldots,N_t \tag{16}$$

Where r_{jt} is real power interruption at bus j in time t, E is expected unserved energy, ε_t is upper limit of expected unserved energy at time t.

Expected Unserved Energy (EUE) or Expected Energy Not Supply (EENS) is calculated by using Capacity Outage Probability Table (COPT) [8] as:

$$EENS = \sum_{k=1}^{j} P_{Rj} Loss_j \left(Load_t - C_{Rj}\right) \; t \in (1,T) \tag{17}$$

$$EENS_{tot} = \sum_{t=1}^{T} EENS_t \tag{18}$$

$$Loss_j = \begin{cases} 1 & if \;\; C_{Rj} \langle Load_t \\ 0 & otherwise \end{cases} \tag{19}$$

Where P_{Rj} is the probability that corresponds to this state, C_{Rj} total capacity that remains in service, $Load_t$ is total load at time t, T is time period and $Loss_j$ is 1 or 0 that present in (19).

III. WIND FARMS SIMULATION

A typical wind energy conversion system (WECS) electrical output curve is shown in Fig. 1 [1].

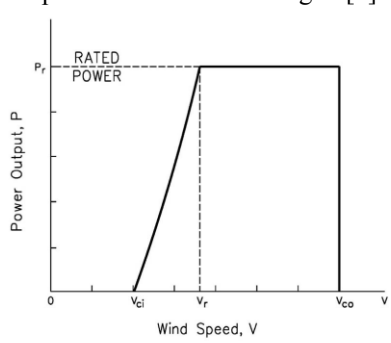

Fig. 1. A typical WECS output characteristic

That is formulated as:

$$P_w = \begin{cases} 0 & V \le V_{ci} \\ \left(A + BV + CV^2\right) & V_{ci} \le V \le V_r \\ P_r & V_r \le V \le V_{co} \\ 0 & V \ge V_{co} \end{cases} \tag{20}$$

Where P_r is rated power output, P_w is power output, V is wind speed, V_{ci} is cut-in wind speed, V_r is rated wind speed, V_{co} is cut-out wind speed. The constants A, B and C may be found as functions of V_{ci} and V_r using the following equations [1]:

$$A = \frac{1}{\left(V_{ci} - V_r\right)^2}\left[V_{ci}\left(V_{ci} + V_r\right) - 4\left(V_{ci} \times V_r\right)\left[\frac{V_{ci} + V_r}{2V_r}\right]^3\right] \tag{21}$$

$$B = \frac{1}{\left(V_{ci} - V_r\right)^2}\left[4\left(V_{ci} + V_r\right)\left[\frac{V_{ci} + V_r}{2V_r}\right]^3 - 3\left(V_{ci} + V_r\right)\right] \tag{22}$$

$$C = \frac{1}{\left(V_{ci} - V_r\right)^2}\left[2 - 4\left[\frac{V_{ci} + V_r}{2V_r}\right]^3\right] \tag{23}$$

Actual power available from wind farm is given by:

$$P_{WG}(t) = P_W A_W \eta N_{WG} \tag{24}$$

Where A_W is the total swept area, η is efficiency of wind turbine generator and corresponding converters, and N_{WG} is the number of wind turbine generator at farm.

In order to model a composite generation system containing wind farm units, the generating units are divided into two groups: conventional units, which may be controlled and scheduled, and wind farm units, which are generally not scheduled, only predicted by statistical methods. Conventional units are represented by two and three-state models. Each WECS in a wind farm is represented by a multi-state model.

In this paper, a WECS rating was taken to be 2.0 MW. The capacity levels and associated probabilities of each WECS are shown in Table I [1].

TABLE I. CAPACITY LEVELS AND ASSOCIATED PROBABILITIES OF EACH WECS

Pout(MW)	Probability
2	0.8029630
1.68	0.0029630
1.40	0.0118519
1.12	0.0059259
0.84	0.0251852
0.64	0.0222222
0.40	0.0192593
0.16	0.0162963
0	0.0933332

The wind farm combined capacity probability model is given by [8]:

$$P(X_i) = \sum_{i=0}^{k}\left(\sum_{j=0}^{s} q_i u(x/i - C_i)\right) P_i \tag{25}$$

Where $P(X_i)$ is probability of the output power for the wind farm, S is number of wind capacity states, C_i is j[th] capacity state, P_i is probability of i units being available, q_i is probability of a wind turbine operating in output state C_i, $u(x)$ is unit step function.

The wind farm (45 units, 2 MW, Force Outage Rate 10%) combined model was formed using the model of Table I and the wind output probability given in (25), and is shown in Table II.

TABLE II. CAPACITY LEVELS AND ASSOCIATED PROBABILITIES OF WIND FARM

Pout(MW)	Probability
0	0.093
7.2	0.016
18	0.02
27	0.022
37.8	0.025
50.4	0.007
63	0.017
75.6	0.21
90	0.59

IV. GAMS AND MINLP SOLVERS

Since 1950s rapid development of algorithms and computer codes to analyze and solve large mathematical programming problems have seen. One important part of this growth was development in the early 1980's of modeling systems, one of the earlier of which was the Generalized Algebraic Modeling System (GAMS). GAMS is a high-level modeling system for mathematical programming problems and Modeling linear, nonlinear and mixed integer optimization problems [9].

Models with objective functions are:

LP for Linear Programming
NLP for Nonlinear Programming
MIP for Mixed Integer Programming
MINLP for Mixed Integer Non Linear Programming
RMIP for Relaxed Mixed Integer Programming
MIQCP for Mixed Integer Quadratically Constrained Program
DNLP for Nonlinear Programming with Discontinuous Derivatives
MPEC for Mathematical Program with Equilibrium Constraints

In this paper authors used SBB that is MINLP solver. Mathematically, the MINL problem looks like:

$$\begin{aligned} &\textit{Minimize or Maximize} \quad f(x) + d(y) \\ &\textit{subject to} \quad g(x) + h(y) \quad \alpha \ 0 \\ &L \le x \le U \\ &y = \{0, 1, 2, ..\} \end{aligned} \tag{26}$$

Where x is a vector of variables that are continuous real numbers, $f(x)+d(y)$ is the objective function, $g(x)+h(d)$ is represents the set of constraints, α is some mixture of = , > and < operators and L and U are vectors of lower and upper bounds on the variables [9].

On the other hand, Benders decomposition decomposes SCUC into a master problem (UC) and a sub-problem. sub-problem contain two sub-systems that corresponding to transmission and voltage constraints. Fig. 2, shows benders decomposition:

A standard form of Benders formulation is [1]:

$$\begin{aligned} &\textit{Minimize} \quad ux \\ &\textit{subject to} \quad Ax \ge b \\ &Ex + Fy \ge h \end{aligned} \tag{27}$$

Using Benders decomposition, the formulation above can be decomposed into a master problem and a sub-problem, which is solved as follows:

1. In the master problem, the unit commitment state x is calculated as:

$$\begin{aligned} &\textit{Minimize} \quad ux \\ &\textit{subject to} \quad Ax \ge b \\ &w(x) \le 0 \end{aligned} \tag{28}$$

Where $w(x)$ is the cut that provides the information regarding the feasibility of the unit commitment state x in terms of transmission security and voltage constrains.

2. Given $\hat{x}$, the sub-problem is formulated as:

$$\begin{aligned} &\textit{Minimize} \quad w(\hat{x}) = dy \\ &\textit{subject to} \quad Fy \ge h - E\hat{x} \end{aligned} \tag{29}$$

If the objective function $w(\hat{x})$ is larger than zero, we produce the Benders cuts $w(x) \le 0$ once a violation is detected in the sub-problem.

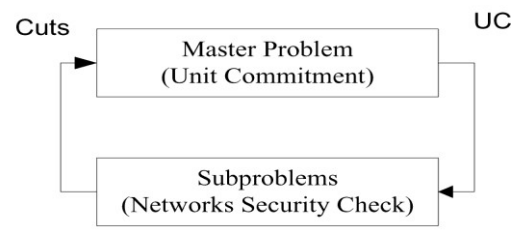

Fig. 2. Benders decomposition

Fig. 3 shows the proposed method and flowchart of SCUC in power system that contain wind farm.

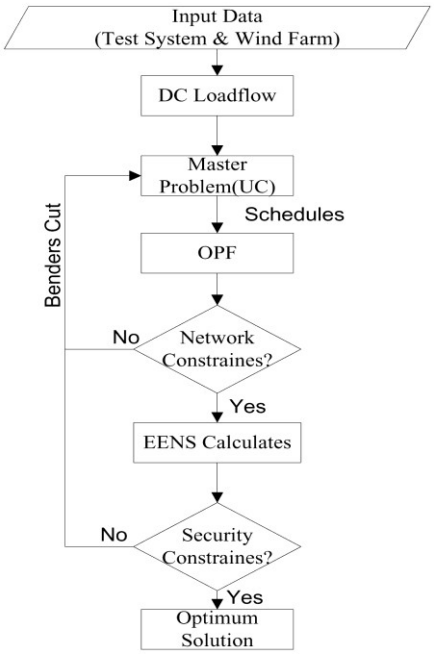

Fig. 3. Proposed method and flowchart

V. CASE STUDY

In order to focus on proposed method, 8-bus system in Fig. 4 is used. There are four thermal units (G1…G4), one wind farm (W1) and ten transmission lines. The wind farm is located at bus 1. The characteristics of generators, buses, and transmission lines are listed in Tables III, IV, respectively [3]. The study period is 24- hours. The 24-hour system load and forecasted wind power are presented in Table V.

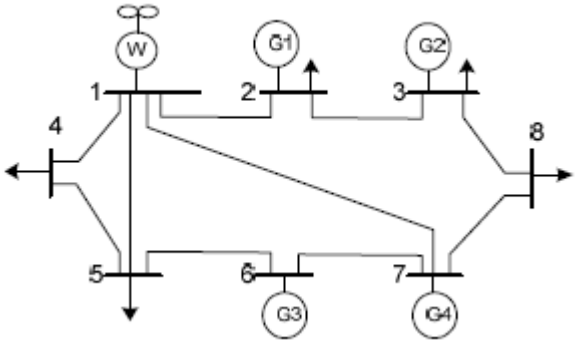

Fig. 4. Case Study

TABLE III. PARAMETERS OF THERMAL UNITS [3]

BUS	2	3	6	7
A	0.012	0.0014	0.0085	0.0046
B	8.66	9.66	19	12.69
C	190	230	270	250
P_{min}	50	50	10	20
P_{max}	200	150	50	100
ST	1600	1500	500	500
Ramp up	0.83	0.83	1.66	2.92
Min up	8	8	1	1
Min down	8	8	1	1

TABLE IV. TRANSMISSION LINE PARAMETERS [3]

Line No	From Bus	To Bus	X(pu)	Line Limit (MW)
1	1	2	0.03	200
2	1	4	0.03	200
2	1	7	0.0065	200
4	2	3	0.011	200
5	5	1	0.03	200
6	4	5	0.03	200
7	5	6	0.02	200
8	6	7	0.025	200
9	7	8	0.015	200
10	8	3	0.022	200

TABLE V. LOAD DEMAND AND WIND POWER [3]

Hour	Wind (MW)	Load (MW)	Hour	Wind (MW)	Load (MW)
1	58.27	377.80	13	10.80	416.86
2	82.12	365.92	14	12.50	408.6
3	89.22	362.86	15	15	402.84
4	84.73	363.11	16	21.62	401.67
5	77.25	370.56	17	15	406.20
6	65.13	386.83	18	10.88	431.55
7	75.91	411.61	19	14.5	468.17
8	71.55	421.20	20	12.54	477.4
9	73.4	428.95	21	16	480
10	49.11	435.17	22	28.41	465.26
11	30.71	432.06	23	30.34	439.86
12	13.09	424.82	24	37.1	409.72

The peak load is 480 MW at hour 21. SCUC is solved by proposed method, the commitment and dispatch of units given in Table VI and VII, respectively. It is necessary to mention that the fuel price is 1 $/MBtu.

TABLE VI. UNIT COMMITMENT RESULT

Unit	ON/OFF (24 Hours)
1	111111111111111111111111
2	111111111111111111111111
3	000000000000000001111110
4	000000111111111111111111

TABLE VII. DISPATCH RESAULT

Hour	Unit1	Unit2	Unit3	Unit4
1	200	119.9	0	0
2	200	83.9	0	0
3	200	74	0	0
4	200	78.6	0	0
5	200	94.2	0	0
6	200	122.8	0	0
7	200	115.7	0	20
8	200	129.5	0	20
9	200	135.5	0	20
10	200	138.5	0	47.5
11	200	138.8	0	62.6

12	200	139.2	0	67.4
13	200	139.8	0	66.2
14	200	140.4	0	55.6
15	200	141	0	47
16	200	140.9	0	39.15
17	200	140.6	0	50.6
18	200	146.7	10	64
19	200	144	28.6	81
20	200	143	41	81
21	200	143	40	81
22	200	145	11	80.8
23	200	147	10	52.4
24	200	141	0	31.6

The start up cost in this case study is constant and not allow (2), on the other hand, G1 and G2 were become ON at first hour, G3 at eighteenth hour and G4 at seventh hour. The cheapest units G1 is always committed with maximum output and also G2 is always committed. The more expensive unit G4 is committed between hours 7 and 24 and The most expensive unit G3 is committed between hours 18 and 23 to supply the generating capacity is required. Total cost is 119010$.

VI. CONCLUSION

A MINLP based SCUC problem including wind farm and proposed method are used in this paper. The example on 8-bus system showed the effectiveness of MINLP solver and Benders decomposition.

REFERENCES

[1] A. A. Chowdhury, "Reliability Models for Large Wind Farms in Generations System Planning", Power Engineering Society General Meeting, 2005. IEEE, 12-16 June 2005, pp. 1926 – 1933.

[2] V. Hamidi, F. Li, F. Robinson, "Responsive demand in networks with high penetration of wind power", Transmission and Distribution Conference and Exposition, 2008. T&D. IEEE/PES, 21-24 April 2008., pp:1-7.

[3] H. Daneshi, A. Daneshi, N. M. Tabari, A. N. Jahromi, "Security-constrained unit commitment in a system with wind generation and compressed air energy storage, " 6th International Conference on the European, 27-29 May 2009, pp.1-6.

[4] M. Shahidehpour and V. Ramesh, "Nonlinear programming algorithms and decomposition strategies for OPF," in IEEE/PES Tutorial on Optimal Power Flow. Piscataway, NJ: IEEE Press, 1996.

[5] M. Shahidehpour, H. Yamin, and Z. Y. Li, Market Operations in Electric Power Systems, New York: Wiley, 2002..

[6] Y. Fu, M. Shahidehpour, and Z. Li, "Security- Constrained Unit Commitment With AC Constraints, " IEEE Trans. On Power Systems, Vol. 20, No. 3, pp. 1538-1550, August 2005.

[7] Y. Fu, M. Shahidehpour, and Z. Li, "AC Contingency Dispatch Based on Security-Constrained Unit Commitment," IEEE Trans. On Power Systems, Vol. 21, No. 2, pp. 897 – 908, may 2006.

[8] S. H. Hosseini, and E. Abbasi, "Probabilistic Unit Commitment with Wind Farms Considerations," Large Engineering Systems Conference on Power Engineering, 2007., pp. 73 – 77.

[9] B. A. McCarl, A. Meeraus, P. V. D. Eijk, M. Bussieck, S. Dirkse, P. Steacy, McCarl Expanded GAMS User Guide Version 22.9, 2008, pp. 42-120.[Online]. Available: http://www.gams.com.