Available online at www.sciencedirect.com

SciVerse ScienceDirect

Solar Energy 85 (2011) 2953–2964

SOLAR ENERGY

www.elsevier.com/locate/solener

Dynamic behaviour of PV generator trackers under irradiation and temperature changes

A. Zegaoui [a,b,*], M. Aillerie [a], P. Petit [a], J.P. Sawicki [a], J.P. Charles [a], A.W. Belarbi [c]

[a] LMOPS Laboratory, University Paul-Verlaine & Supelec, 2 rue Ed. Belin, 57070 Metz, France
[b] University Hassiba Ben Bouali, BP154, 02000 Chlef, Algeria
[c] University Mohamed Boudiaf USTO, BP1505 El Mnaouer, Oran, Algeria

Received 31 March 2011; received in revised form 24 August 2011; accepted 25 August 2011
Available online 24 September 2011

Communicated by: Associate Editor Nicola Romeo

Abstract

Maximum power point trackers (MPPTs) have a decisive role to extract power from the photovoltaic (PV) generators as they have to assume the maximum power output (MPP) whatever are the continuous changes of temperature and irradiation conditions. Therefore, they take a prior place in the global PV system efficiency. These trackers are driven by MPPT algorithms and lot of these MPPT algorithms are proposed in literature. The two most common implemented algorithms for power optimisation are the Perturb and Observe (P&O) and the Incremental of Conductance (IncCond) algorithms, which present a high simplicity of implementation within electronics programmable circuits. With an approach based on realistic parameters such as those found when the generator is integrated in a real photovoltaic installation, the two MPPT techniques are dynamically compared using testing procedures developed with Matlab/Simulink. The study leads us to conclude that both algorithms can be performed for PV exposures in unfavourable but realistic external conditions.
© 2011 Elsevier Ltd. All rights reserved.

Keywords: Maximum power point tracking; Photovoltaic generator; DC–DC converters; Buck–boost converter; Microcontroller; Renewable energy

1. Introduction

The use of solar photovoltaic energy found its usefulness in electricity power production for small scale, stand alone systems at low voltage and also in high power installations, usually connected to the grid and operating at medium or high voltage. Whatever the type of installation – one or two stage grid, connected or not – photovoltaic energy is an interesting source of energy: it is renewable, inexhaustible and nonpolluting, so that, it is more and more intensively used as an energy source. In stand alone photovoltaic generator (PVG), the produced energy is used either directly or associated with a storage in batteries or in an energy reserve, e.g. hydraulic. In connected PVG, it may be associated with inverters and voltage step-up or step-down systems (i.e. choppers). A good efficiency of the PVG can be carried out if it constantly converts the maximum of the available solar power all the time. Consequently the power delivered by an operating PV generator should continuously be at its maximum value (maximum power point – MPP) i.e. at its highest global efficiency related to the available solar irradiation ψ_a, wind speed, ambient temperature T_a, and the presence of transient or permanent faults not directly driven by the load (Charles et al., 1995; Villalva et al., 2009; Nema et al., 2009; Alonso-Garcia and Ruiz, 2006). The power supplied varies also according to the nature of the load, the technology of the PV cells, and the shadowing of the panels due to random

* Corresponding author at: LMOPS Laboratory, University Paul-Verlaine, Metz, France.
E-mail addresses: abd_zegaoui@yahoo.fr (A. Zegaoui), aillerie@metz.supelec.fr (M. Aillerie).

0038-092X/$ - see front matter © 2011 Elsevier Ltd. All rights reserved.
doi:10.1016/j.solener.2011.08.038

Elearnica Downloaded from http://www.elearnica.ir

causes, e.g. falling leaves, dust or dirt. Maximum power production is performed by a voltage converter associated to an electronic maximum power point tracker (MPPT) system (Enslin et al., 1997).

Thus, whatever the weather conditions (temperature and irradiation) and whatever the load, the converter control system or tracker must always position the system at the optimal operating power point corresponding to an optimal current $I_{PV\text{opt}}$ and an optimal voltage $V_{PV\text{opt}}$. As the operating point of the generator on the I–V curve is dynamically modified, the MPPT must get a novel MPP at any moment and must maintain PVG power in the neighbourhood of this point to produce power with the higher efficiency and accepted ripple on power signal taken in based time (Hua and Shen, 1998; Hohm and Ropp, 2000).

Within this context and taking into account discrete and continuous changes of irradiance and temperature on the PV system, the two most currently MPPT techniques, which are based on the Perturb and Observe (P&O) and the Incremental of Conductance (IncCond) methods were originally implemented, tested and compared under Matlab/Simulink environment. The two implemented algorithms present fast response to any external perturbations on the PV system and allow fast positioning to the MPP. This fact presents the main advantage of this implementation – algorithms and programming under Matlab/Simulink environment – and is especially due to the relatively high simplicity of the implementation and realisation which can be done with microcontrollers, thanks to digital programming (Bae et al., 2007). In this work, simulations were done with a standard PVG followed by a DC–DC converter (buck–boost converter). The results of simulation suggest the possibility of an improvement of the PVG efficiency, by the implementation of more performing algorithms based on the two common presented methods.

2. Basic photovoltaic generator models

In operating PV studies (Charles et al., 1995), the photovoltaic cell/module, as shown in Fig. 1a, is usually presented as a photodiode component with the basic characteristics of a P–N junction as in Fig. 1b (Campbell, 2007; Gow and Manning, 1999). The model includes a photovoltaic current generator in parallel with the diode and resistive losses are localised in a serial resistor, R_s for the interface metal–semiconductor and the intrinsic silicon resistances and with a shunt resistor, R_{sh} for the surface roughness along the cell periphery.

In PV Cell model, the expression of its current I related to its voltage V is given by:

$$I = \underbrace{I_{SC} \cdot \frac{\psi}{1000}}_{I_{ph}} - \underbrace{I_{sat}\left[e^{\frac{q \cdot V - R_S \cdot I}{n \cdot K \cdot T}} - 1\right]}_{I_D} - \underbrace{\frac{V + R_S \cdot I}{R_{sh}}}_{I_{R_{sh}}} \tag{1}$$

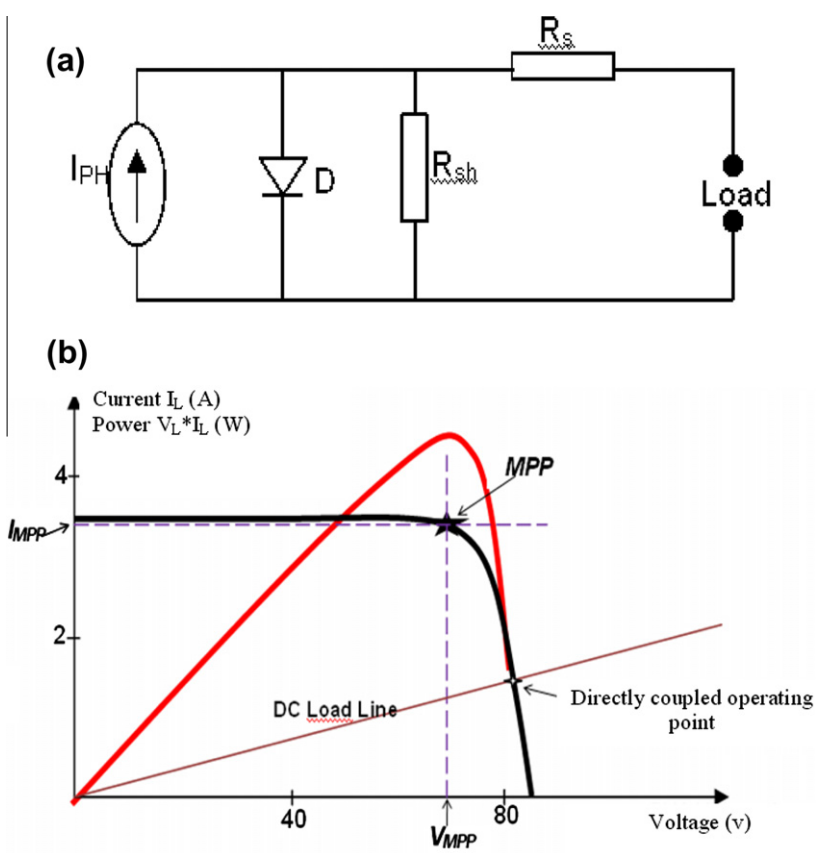

Fig. 1. Electrical photovoltaic cell model: (a) PV cell/panel ideal equivalent circuit and (b) I–V/P–V curve characteristic of PV Generator.

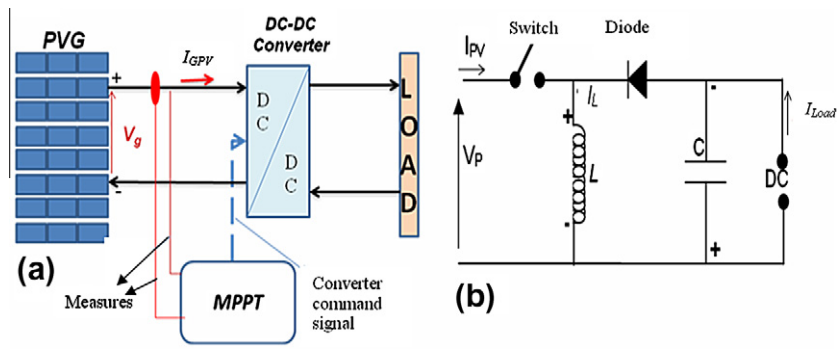

Fig. 2. (a) The complete photovoltaic installation i.e. PVG-Boost-Load and MPPT controller and (b) the electrical circuit of the buck–boost DC/DC converter.

where:

$$I_{sat} = I_{satnom} \cdot \left(\frac{T_r}{T}\right)^3 \tag{2}$$

As a PVG is composed by N_s cells in series and N_p cells in parallel, the I–V characteristic is given by:

$$I = N_p \cdot I_{SC} \cdot \frac{\psi}{1000} - N_p \cdot I_{sat} \cdot \left(\exp\left[q \cdot \left(\frac{V}{N_s} + \frac{R_s \cdot I}{N_p}\right) \Big/ n \cdot K \cdot T\right] - 1\right) - \left(\frac{V}{N_s} + \frac{R_s \cdot I}{N_p}\right) \Big/ R_{sh} \tag{3}$$

where I_{ph} is the photocurrent of the solar cell, I_{sc} the short circuit current, I_{sat} the reverse saturation current of the junction, I_{satnom}, being its nominal value, I_D is the current across the diode, $I_{R_{sh}}$ the leakage current, q is the electron charge (1.6×10^{-19} C), K is the Boltzmann constant (1.38×10^{-23} J/K), T_r the reference temperature at STD conditions, T the solar cell temperature, and n the ideality factor of the photovoltaic cell (Charles et al., 1995; Faranda and Leva, 2008; Enrique et al., 2007).

The complete studied system is shown in Fig. 2a. In our analysis, we consider a photovoltaic generator supplying a DC load, e.g. a battery through an adaptation stage constituted by a buck–boost converter, as in Fig. 2b, driven by a MPPT assuming the maximum efficiency for the energy transfer. The typical efficiencies reported in literature (Saadi and Moussi, 2007; Jain and Agarwal, 2007) of various type of converters, i.e. boost, buck–boost and buck chopper, are 91%, 93% and 97% respectively. The buck–boost converter presents a good efficiency and is generally used to lower the PVG output voltage (Saadi and Moussi, 2007; Enrique et al., 2005, 2007) This type of converter is considered here to study the adaptation of the charge to the generator.

MPPT are intended to minimise the error between the output power actually delivered and the maximum power obtained when the system controlled by the tracker reaches the MPP. The determination of the maximum reference power is more delicate due to the illumination and temperature unsteadiness.

The MPP determination is based on several analogue or digital methods, which are integrated in the generators using suitable data-processing tools. The main differences between these methods are their complexity, the sensor requirements, the convergence speed, the cost, the range of efficiency, and the necessary hardware for implementation (Esram and Chapman, 2007).

3. Evaluation of the two common MPPT algorithms

3.1. Perturb and Observe MPPT algorithm (P&O)

This method presents the structure of a simple regulation in closed-loop where only a few controlled parameters are involved. By varying the voltage of the panel periodically with a very small incremental step to reduce the oscillation around the MPP or a desired step, the P&O algorithm compares the power previously delivered with the one after disturbance. This algorithm is widely used in commercial systems due to its quite simple structure and the few measured parameters involved (Liu et al., 2008a,b; Sera et al., 2006).

The block diagram under Matlab of P&O MPPT and the P–V characteristics are plotted in Fig. 3. The principle can be described as follows: as shown in Fig. 3, in the ascending phase of the P–V characteristics and considering a positive change of the panel voltage, the tracker generates a positive change in the voltage, $\Delta V \geqslant 0$, which results in an increase of the delivered power and change of the operating point X_i ($i = 1, 2, \ldots, n-1$). In this case, the output voltage and the PVG power increase up to a new point X_{i+1}. Similar steps with opposite direction can be done in the case of a decrease of the supplied power. Under these conditions, the tracker seeks the MPP permanently. Nevertheless, the change in power is similar to a perturbation of the output voltage and the algorithm does not compare this voltage with the present MPP voltage. Therefore, if the power increases, the voltage variation is kept the same to obtain the MPP, *a contrario*, if the power decreases, the voltage variation should be reversed.

The four possible combinations of voltage variations and the consequences in power variations P_i are given in

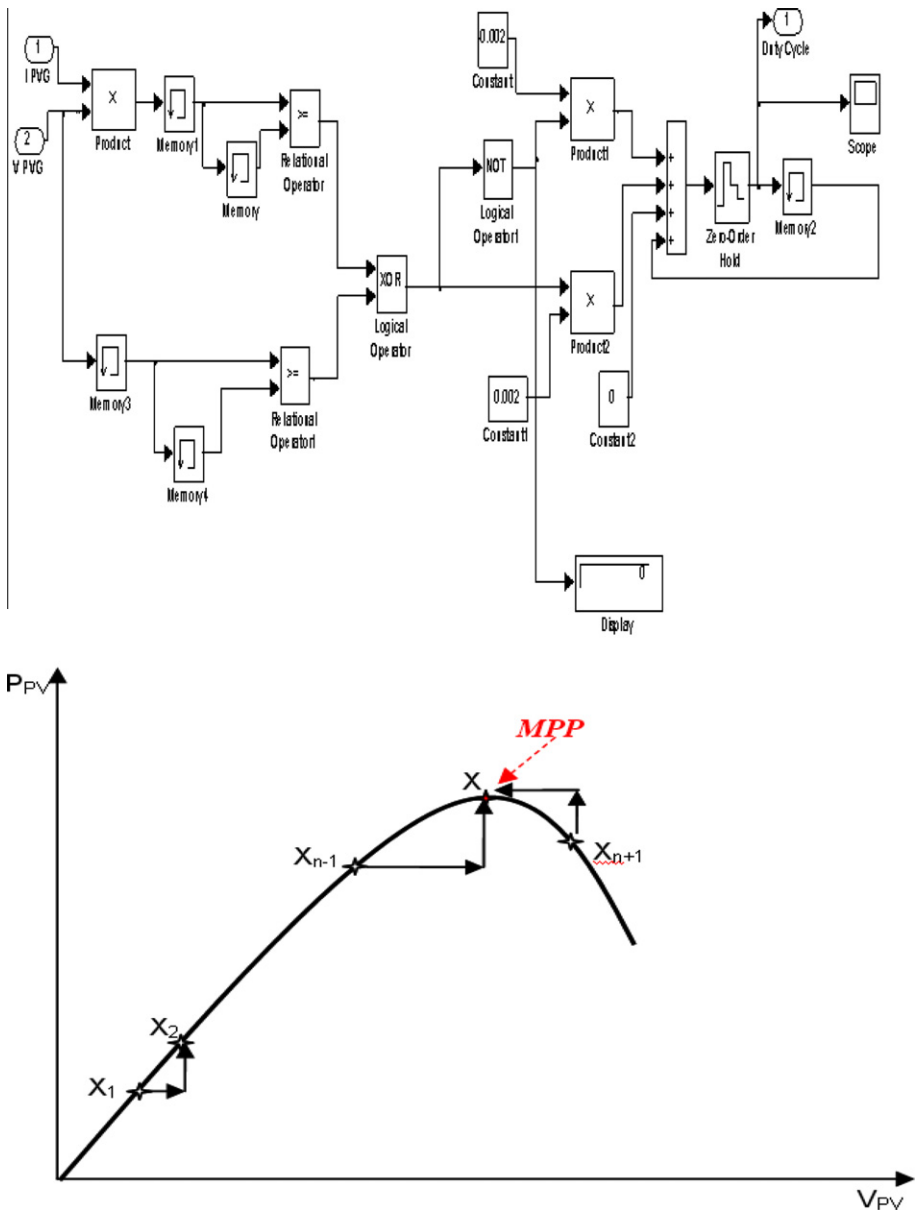

Fig. 3. Flowchart algorithm of the improved P&O MPPT under Matlab and principle shown on the P–V characteristics.

Table 1 (Esram and Chapman, 2007), showing the sign of the perturbation ΔP_{i+1} in the next step. It is to be of note that perturbation ΔP_{i+1} is positive when the power change is $(P_{i+1} - P_i) \geqslant 0$ and negative in reverse.

At specified insulation level and temperature, the desired PVG power is the solution of the nonlinear is given by:

$$\frac{dP_{PV}}{dV_{PV}} = \frac{d(V_{PV} \cdot I_{PV})}{dV_{PV}} = 0 \tag{4}$$

Table 1
Summary of P&O algorithm (Esram and Chapman, 2007).

Perturbation	Change in power	Next perturbation
Positive	Positive	Positive
Positive	Negative	Negative
Negative	Positive	Negative
Negative	Negative	Positive

One can remark the high simplicity of the flowchart and the implemented procedure, which will be compared in term of efficiency with the second method in a following paragraph.

3.2. Incremental Conductance MPPT algorithm (IncCond)

In this method, the output voltage of the generator is continuously adjusted according to the MPP voltage by the comparison of the instantaneous conductance (I_{pv}/V_{pv}) to its negative local conductance variation $-(dI_{pv}/dV_{pv})$ in order to adjust the operating point on the I–V curves to the MPP corresponding voltage. The ratio dP_{pv}/dV_{pv} equal zero at the MPP and is positive on its left and negative on its right that yields for the corresponding P_{pv} around the MPP (Esram and Chapman, 2007; Hua and Lin, 2003; Liu et al., 2008a,b).

$$\frac{dP_{PV}}{dV_{PV}} = \frac{d(V_{PV} \cdot I_{PV})}{dV_{PV}} = V_{PV} \cdot \frac{dI_{PV}}{dV_{PV}} + I_{PV} \tag{5.1}$$

$$\Rightarrow \left\{ \begin{array}{lll} \frac{dP_{PV}}{dV_{PV}} > 0 & \text{if} & \frac{I_{PV}}{V_{PV}} > -\frac{dI_{PV}}{dV_{PV}}, \text{ left of MPP} \\ \frac{dP_{PV}}{dV_{PV}} = 0 & \text{if} & \frac{I_{PV}}{V_{PV}} = -\frac{dI_{PV}}{dV_{PV}}, \text{ at MPP} \\ \frac{dP_{PV}}{dV_{PV}} < 0 & \text{if} & \frac{I_{PV}}{V_{PV}} < -\frac{dI_{PV}}{dV_{PV}}, \text{ right of MPP} \end{array} \right\} \tag{5.2}$$

In addition Eq. (5) shows that even when the tracker is located at the MPP, i.e. when $dP_{pv}/dV_{pv} = 0$, the sign of dI_{PV} indicates instantaneously the sign of the necessary adjustment of the output voltage. This situation is useful when atmospheric conditions change on the PV array. It is to be of note that the size of the incremental step of the PV voltage or PV current determines the speed of the MPP tracking as fast tracking can be achieved by large

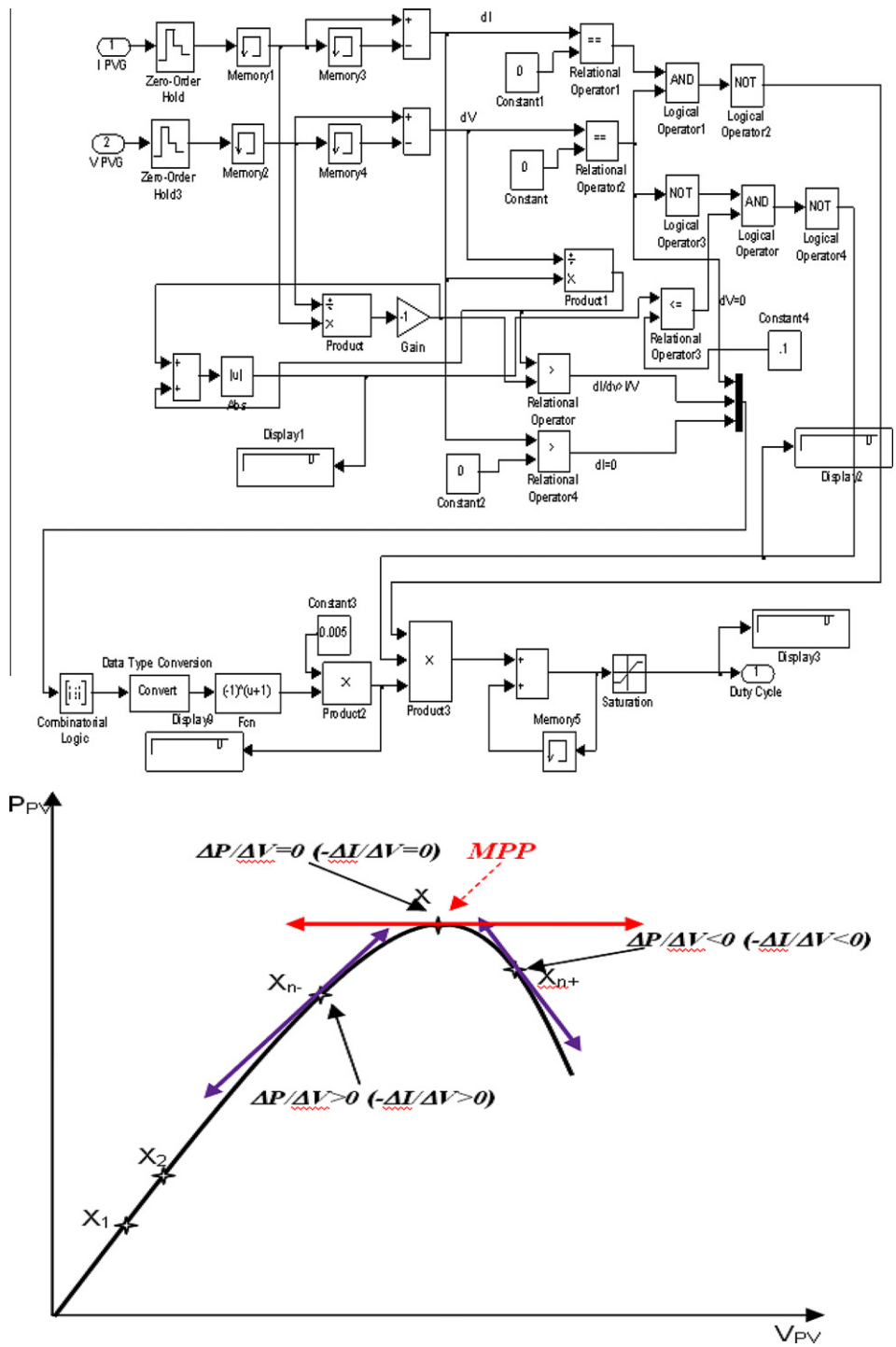

Fig. 4. Flow chart algorithm of the improved IncCond MPPT under Matlab and principle show in P–V characteristics.

increments but, in this case, the system will oscillate around the MPP and might not operate at a fixed MPP. When an open loop regulation system is considered, a compromise must be found to achieve an efficient system suited to the dynamic of the input environmental and climatic parameters.

Nevertheless, with the numerous facilities offered by common DSP and microcontrollers, and their relative low cost, one can design a close-loop regulation system continuously adjusting the voltage or the current incremental step with the calculated value of the error signal defined by:

$$\varepsilon = \frac{dI_{PV}}{dV_{PV}} + \frac{I_{PV}}{V_{PV}} \tag{6}$$

The flowchart of the IncCond algorithm developed and implemented under Matlab/Simulink is shown in Fig. 4. It is to be of note that the comparison between the flowcharts of the two methods points-out the higher complexity of this last one.

Nevertheless, progresses done in numerical electronics allow a quite easy implementation of both solutions and the complexity of the algorithms is not considered as a choice criteria. The related PV characteristics are shown with an illustration of the specific situations discussed in the text above. Note that, when this algorithm is developed in a closed-loop procedure, it continuously calculates the direction needed to search the MPP after a perturbation and remains stable when this is achieved.

4. Procedure and results

For comparison of the efficiency of the two improved algorithms presented above, we have integrated them in a new procedure under Matlab/Simulink. We note in the flowchart of Fig. 5 the two branches corresponding to the two algorithms under test and the relative blocks corresponding to each MPPT algorithm.

We have developed a series of parameters and settings based on separate changes of the illumination and temperature conditions, and of the charge value of the generator. In our simulations, we used a battery as the load except for one case to obtain the experimental results.

Currently, basic tests of MPPT algorithms reported in literature are done with high amplitude steps i.e. rapid changes of one of the external parameters of the PV system (Santos et al., 2006; Yu et al., 2004). To conform to literature and to validate our implemented models, we present in the four following subparagraphs, results obtained with these common sets of parameter variations. Nevertheless, it is to be of note that under actual operating conditions, the changes of these input and output parameters of the PVG/array are no so abrupt and not with such huge amplitude as commonly simulated. For example, when shadows appear on a panel or especially when temperature significantly changes, the dynamic of these parameters is in the magnitude of the second, which is at a minimum of two order of magnitude of the controller response. To study the robustness of the two proposed algorithms with respect to various but realistic environmental conditions we have defined and presented in the following subparagraphs an original set of tests carried out by simulation. All tests were developed with respect to AM1.5. The tests on the MPPT algorithms respect the standard tests usual in literature and, to be close to the reality of photovoltaic production, we consider continuous changes of the disturbing parameters with their time constants and amplitudes link to the true dynamic of the environmental condition variations.

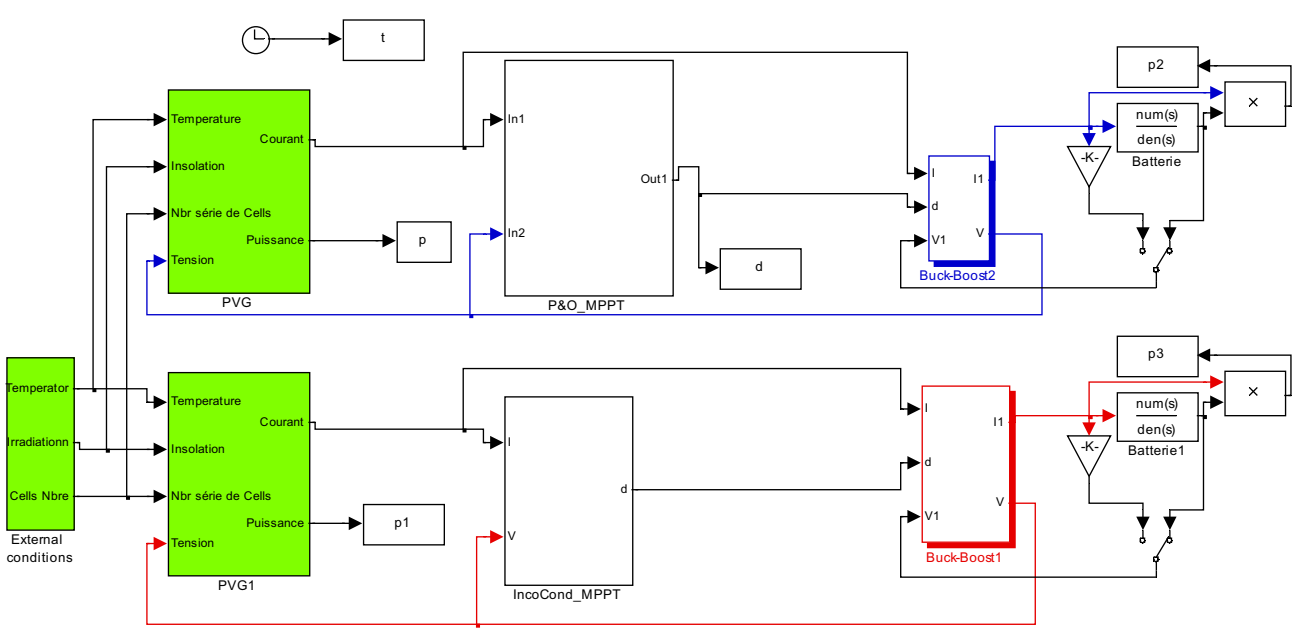

Fig. 5. The Matlab/Simulink Model developed for the series of settings performed on the MPPT algorithms.

4.1. Robustness of the two algorithms to illumination changes

We carried out a first series of tests in which the photovoltaic generator is exposed to illumination varying from 1000 to 600 and then to 1000 W/m^2. In practice this variation in the illumination is observed, for example, when a cloud suddenly disappears or when shadowing is caused by a tree in the wind. The temperature is maintained constant at $T = 25$ °C. During this test, we also consider a solar irradiation increases or decreases as a linear function with a time constant in the range of the second. All simulations are done with association of PV generators as defined above in the text, i.e. PV panel with 36 cells connected in two strings in parallel.

We show in Fig. 6, the dynamic response of the PV system driven by the two algorithms. We can note that the response times of the two algorithms are different for the same illumination variations. Nevertheless, due to the specific algorithms developed and implementation we have done, the response to the perturbations, continuous or discrete are instantaneous for both.

We observe that the obtained characteristics curves, especially the power ones, show the faster response offered by the IncCond MPPT compared to the P&O to irradiance changes. Fig. 6 clearly shows that for linear changes in the level of irradiation, the two algorithms reach the MPP and allow the PVG to work at its maximum power. Nevertheless the P&O MPPT is the most adapted for these situations because it approaches the new MPP faster than the IncCond MPPT but with more oscillations.

4.2. Robustness of the two algorithms to temperature changes

The main characteristic curves of the PVG response to a temperature change from ambient to 10 °C with a pulse shape of two second duration, are represented in Fig. 7. The illumination is maintained at a fixed value equal to 1000 W/m^2. This step is followed by a temperature monotonic increases in a ramp function, simulated random changes from $T = 25$ °C during several hours.

The first part of the test, corresponding to the step, does not represent practical situation but is currently used by authors to simulate the influence of temperature changes in PVG behaviour. It avoids making long duration tests but it allows by extended the present simulating results, to simulate slow changes of temperature due, as example, presence or not of clouds above the panels. The second part of this test that we have added is closer to the reality.

These curves, Fig. 7 show that the P&O MPPT algorithm carries out variations before reaching the new MPP whereas the IncCond MPPT one tends directly towards this MPP. Thus, with this simulation tool, we have highlighted the fact that for fast step changes in temperature, the advantages of the IncCond to the P&O algorithms by

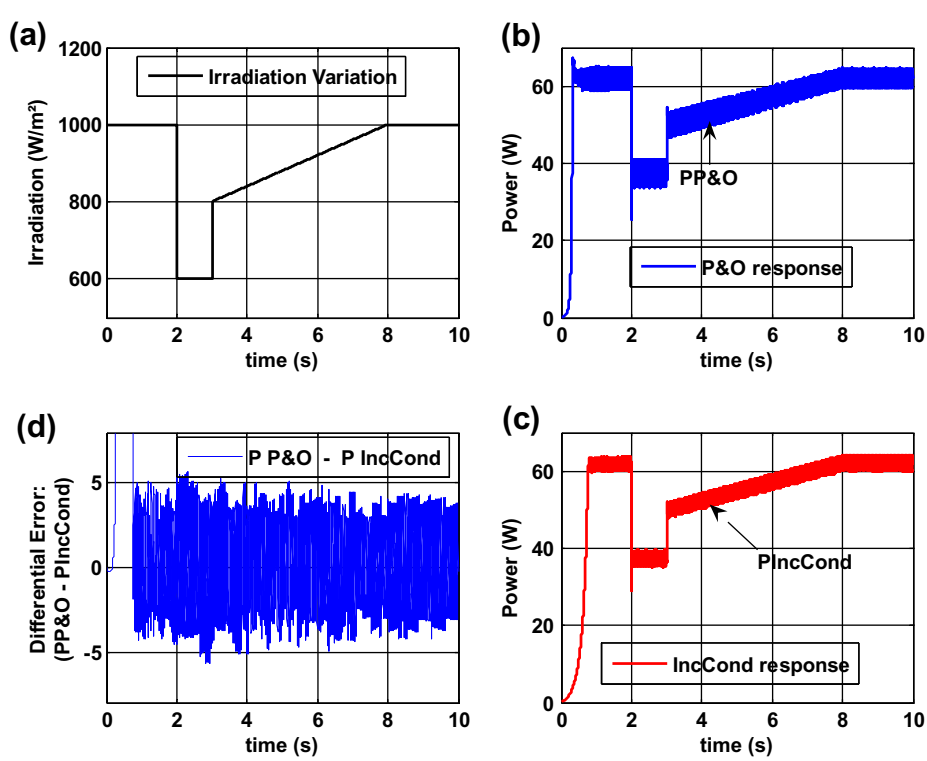

Fig. 6. Influence of illumination variations on the control of both MPPTs at fixed temperature 25 °C: (a) illumination variations; (b) P&O response of the PVG power (blue); (c) IncCond response of the PVG power (red) and (d) differential error between both MPPts power responses. (For interpretation of the references to colour in this figure legend, the reader is referred to the web version of this article.)

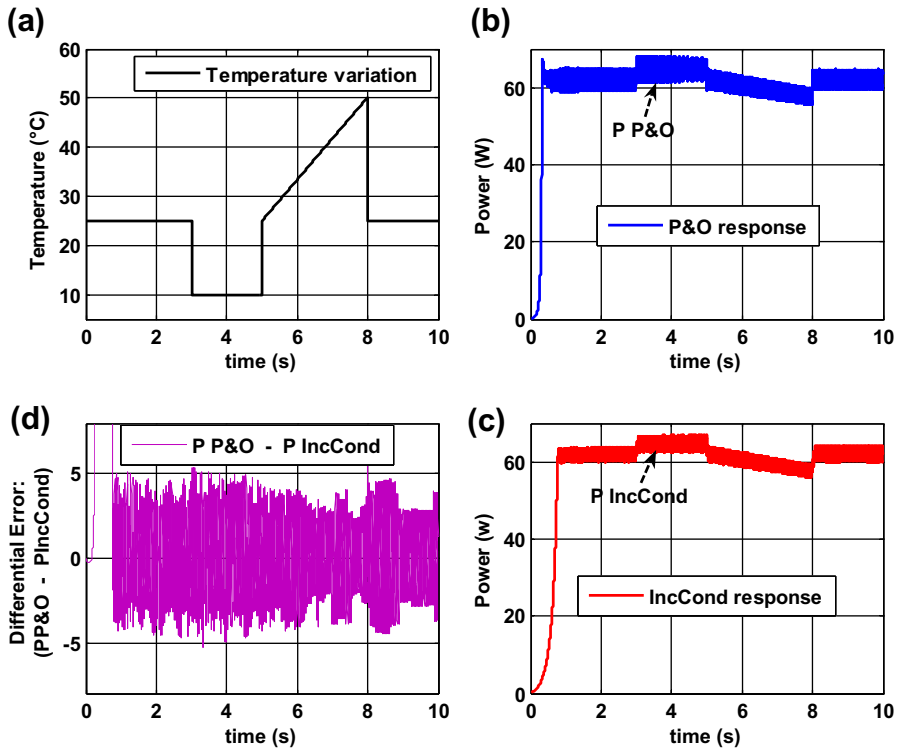

Fig. 7. Influence of temperature variations on the control of both MPPTs at fixed illumination 1000 W/m^2: (a) temperature variations; (b) P&O response of PVG power (blue); (c) IncCond response of PVG power (red) and (d) differential error between responses of both algorithms. (For interpretation of the references to colour in this figure legend, the reader is referred to the web version of this article.)

a faster achievement of the MPP which is carried out immediately in the good direction without additional oscillations when the MPP is reached.

On the other hand in the same figure, the real behaviour of the temperature is better considered. In the case of a linear variation, like slope wave, in addition to step variations in level, we note that IncCond MPPT algorithm reaches the new MPP before P&O MPPT and this does not depend on the type of temperature variations. And what validates our study is that the power of the PVG follows the variation of temperature conversely what is completely the opposite in Fig. 7.

We report in Fig. 8 the response of the two algorithms to a random variation of the temperature. We note that for a sharp variation of temperature, such simulated by a random function between a minimal value of 20 °C and a maximum value of 30 °C in a few days; it's clear that the algorithm which adapts better and rapidly is IncCond MPPT but it oscillates more than the P&O one. It is sure that P&O MPPT makes also a good exploitation of the PV panel by a tracking of the MPP but if the situation imposes a fast continuation we prefer to use IncCond MPPT. Indeed, the load also influences on the exploitation of the PVG because it is clear (Fig. 8) that the battery justifies the delay in reaching the MPP during the first second by IncCond MPPT but after it seems the best to make a fast tracking what is justified by P–V curves statement in this case of study.

4.3. PVG response as function of the charges

Independently of the input factors linked to the illumination and the temperature, the efficiency of MPPT algorithms depends of the type of load at which the generator is connected. Thus, we carried out tests with the two MPPT sequentially for the two following cases, when the load is a resistor and when the load is a battery. The results of the power are reported in the two parts of Fig. 9 in the case of passive – resistive and dynamic – battery loads, respectively. As long as a battery a dynamic load, Fig. 8 shows clearly that both MPPTs are only and remarkably different in the starting phase operating time.

When a static load is connected to the converter, the response time of the two algorithms is short with a better performance associated to the IncCond method. Nevertheless, when a dynamic load is connected, the response time increases five times for the IncCond method and only twice for the P&O method, which thus presents better efficiency. In this case, the response time of the P&O method is shorter of 40% compared to the IncCond one.

We compare in Fig. 10 the behaviour of the PVG without and with trackers when the system is associated to a dynamic load, changing with time as in real cases, e.g. when a system is connected to a grid simulated in Fig. 10a.

As shown above, the type of the load also influences the control of both MPPTs. The PVG without MPPT controller never works at the maximum power except when the

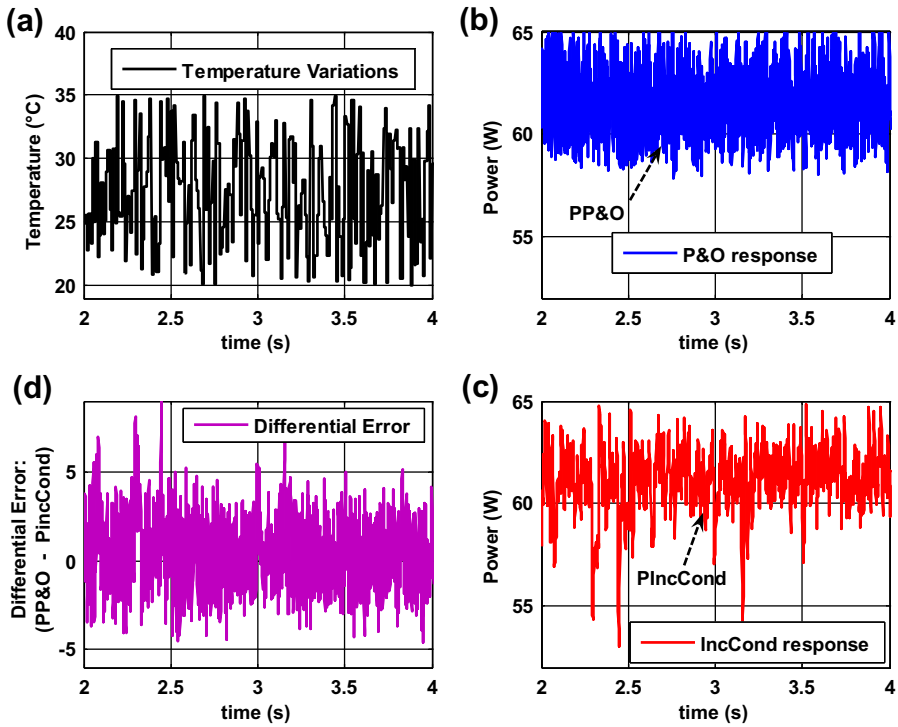

Fig. 8. Influence of random variations of temperature on the control of both MPPTs at fixed illumination 1000 W/m^2: (a) random temperature variation in days; (b) P&O response of the PVG power (blue); IncCond response of the PVG power (red) and (d) differential error between responses of both algorithms. (For interpretation of the references to colour in this figure legend, the reader is referred to the web version of this article.)

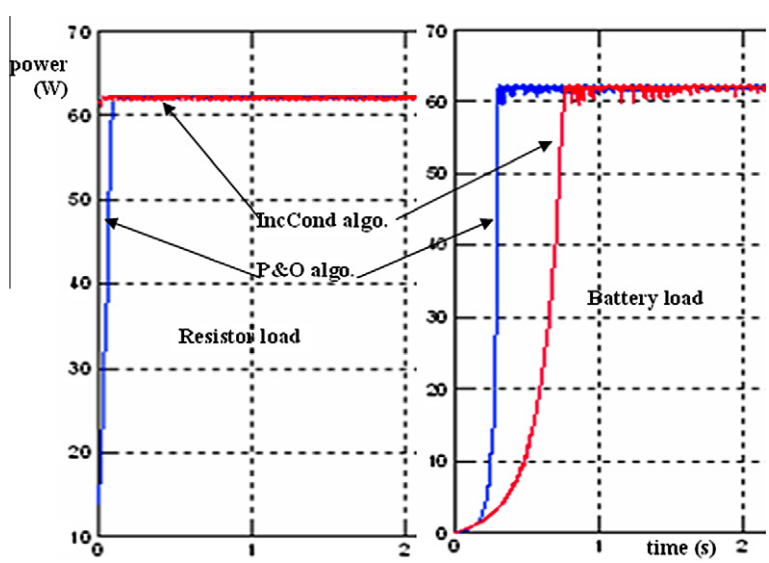

Fig. 9. Influence of battery charge in the starting time phase with the two controllers P&O MPPT (blue line) and IncCond MPPT (red line) for $T = 25$ °C and $G = 1000$ W/m^2. (For interpretation of the references to colour in this figure legend, the reader is referred to the web version of this article.)

load equals the optimum value of the load impedance, as during time between 5.5 s and 8 s in the simulation curves, Fig. 10. On the other hand, with both MPPT algorithms, the operating point always follows the maximum power and does not depend on the load variation. We note also that the PV voltage is stable in systems driven by MPPT algorithms and that on contrary; it is variable according to the load without. The maximum power point is achieved by the use of a MPPT stage response closely approaches the optimum efficiency with both algorithms while the losses without regulation hugely increase.

4.4. Robustness of the two algorithms with closer realistic conditions

In Fig. 11, real functioning conditions of PV generators are considered, taking into account that the gradient of irradiation influences directly the variation in temperature,

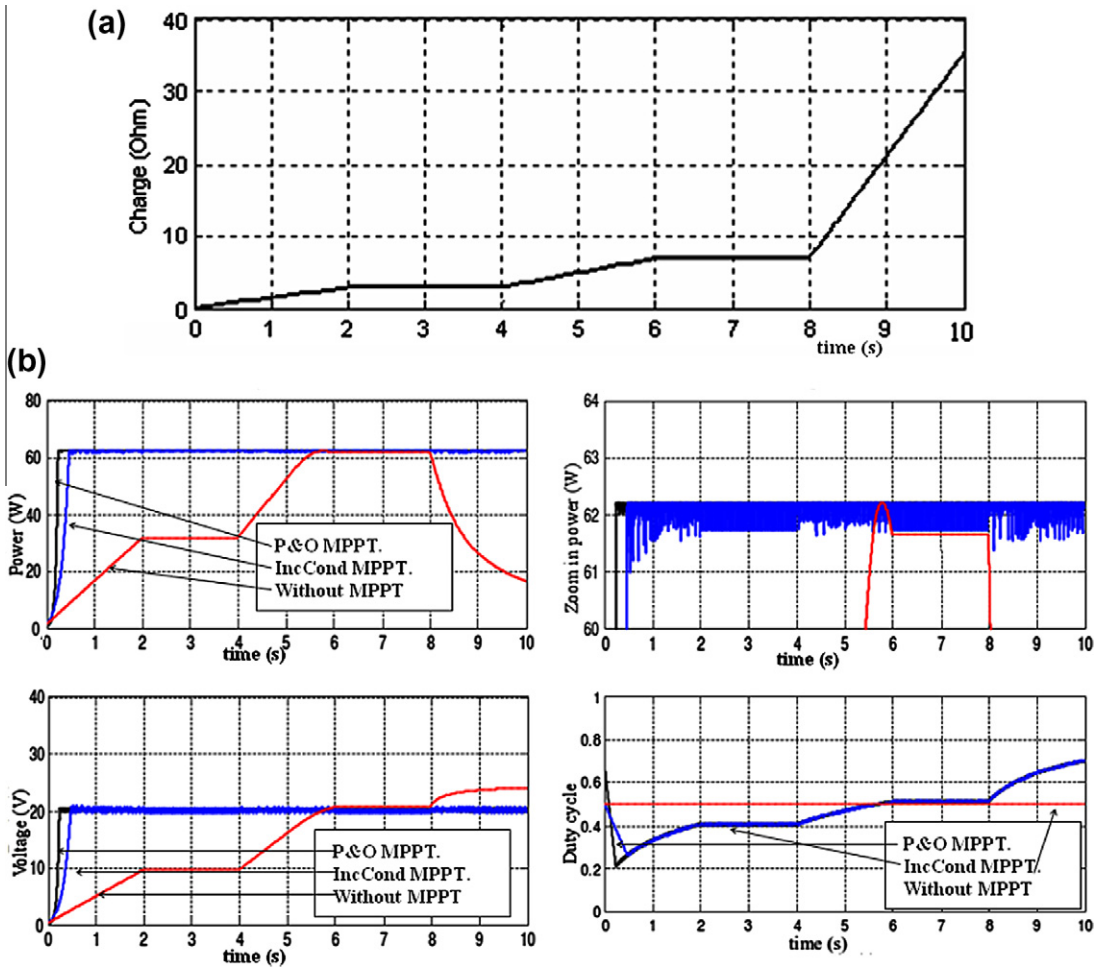

Fig. 10. Generator response without and with trackers when the system is associated to a grid or a dynamic load. (a) Simulation of the dynamic load behaviour according to time. (b) Influence of the load behaviour on power, voltage, and duty cycle for generator without (red line), with P&O (grey line) and IncCond MPP (blue line) tracker algorithms. (For interpretation of the references to colour in this figure legend, the reader is referred to the web version of this article.)

as shown in the experimental model making relation between temperature and irradiation due to Eq. (6).

The difference between the PV array junction temperature T and the ambient temperature T_a is influenced by the total irradiance ψ_a, wind velocity and direction. On the assumption that the PV array junction temperature rises by 30 °C against the temperature under the condition $\psi_a = 1.0$ kw/m^2 considering wind, T is assumed by the following equation (Kawmura et al., 1997):

$$T = T_a + 30 \cdot \psi_a \tag{7}$$

Therefore any change in the function irradiation introduces a change of temperature immediately. When with the control of both MPPTs, one notes as well as controller MPPT IncCond is very sensitive to the variations in temperature. Therefore the speed in continuation of the new MPP by IncCond algorithm is vaguely noted in curves statement and this some is the load.

In a first approach and at the contrary to the P&O algorithm, we can predict that the IncCond algorithm does not track in the wrong direction after a rapid change of the functioning conditions and does not oscillate about the MPP when it reaches it.

We can notice that IncCond MPPT offers a better continuation to discontinuous and brutal changes of the atmospheric conditions, but the differences in both algorithms is not drastic in case of continuous changes of the irradiations. We can also confirm with these tests that the temperature is a well-known factor that decreases the efficiency of the installation.

Finally, even if the overall better intrinsic performances of the IncCond algorithm can be shown by this study, we have to consider the simplicity of the P&O MPPT one, which makes it largely used according to the facility to implement in practical applications.

5. Conclusion

The maximum power point tracker has to match, with the highest electrical efficiency, its own load to the

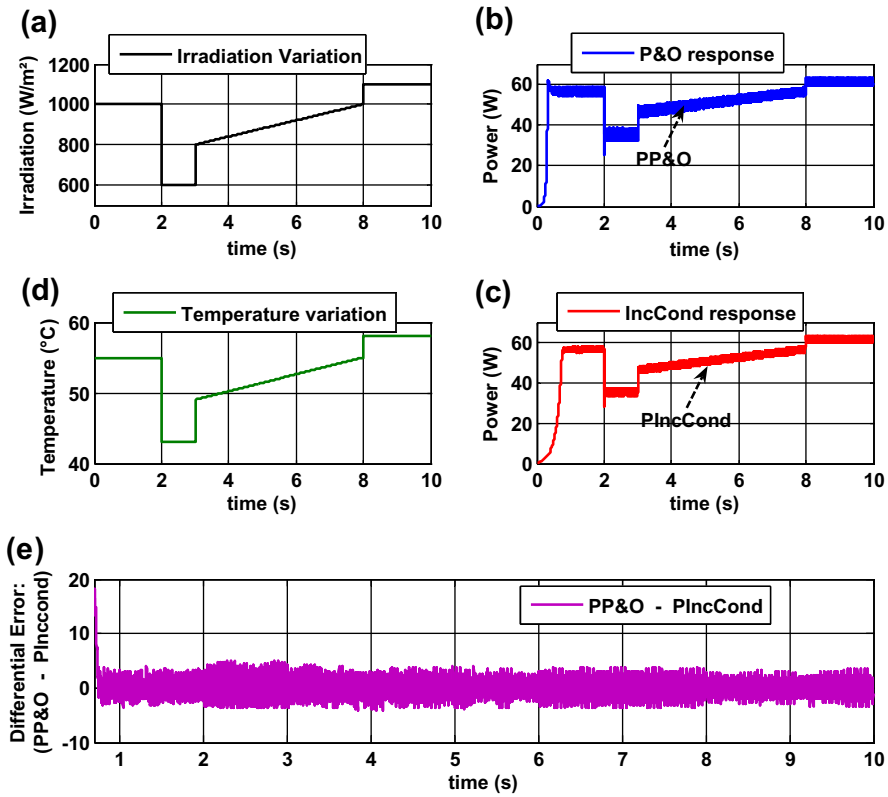

Fig. 11. Influence of temperature variations according to the Irradiation variations on the control of both MPPTs: (a) irradiation variations; (b) P&O response of PVG power (blue); (c) IncCond response of PVG power (red); (d) temperature variations due to the irradiations variations and (e) differential error between the two MPPTs responses. (For interpretation of the references to colour in this figure legend, the reader is referred to the web version of this article.)

maximum available power from a photovoltaic generator (PVG). Two common tracking methods, the Perturb and Observe and Incremental Conductance are currently used in systems. In literature, we currently found comparisons between the two methods based on the analysis of the complexity and the cost of the implementation of the associated algorithms. In the present study, the comparison was based on the performance of these two methods such as the response time, the efficiency, and the algorithm complexity. This comparison was done under irradiation level and temperature variations under realistic conditions. The analyses were performed with parameters currently considered in literature added with an original set of parameters chosen to be closer to the reality of photovoltaic systems. The two common methods were implemented by an original model under Matlab/Simulink environment. The corresponding algorithms involve the instantaneous tracking of the maximum power point, improving the basic methods. We have considered the efficiency of the algorithms to reach the maximum power point, with static and dynamic loads, for various discrete and continuous variations of irradiation and temperature levels and with random variations of these parameters. The system without MPPT is also considered.

The simulation points out that both the P&O and the IncCond MPPTs reach the intended maximum power point, which is not the case when no tracker is associated. With trackers, the system presents a satisfactory response under fast changes of atmospheric conditions but the approach and the stability of the MPP are not achieved in the same way with the two algorithms. The IncCond MPPT presents better efficiency for rapid changes and a better stability when the MPP is achieved but is more complex than the P&O one. Nevertheless, in spite of their complexities these algorithms could be easily implemented using a microcontroller or a FPGA as driver circuits for converters, especially if compared with classical analogue systems.

Finally, this work brings, in case of PV exposures to unfavourable but realistic external conditions, an exhaustive comparison of the two common algorithms for who wants to easily evaluate both models performances. Both algorithms can easily be implemented and evaluated.

References

Alonso-Garcia, M.C., Ruiz, J.M., 2006. A model for the series–parallel association of photovoltaic devices. Progr. Photovoltaic: Res. Appl. 14, 237–247.

Bae, H.-S., Park, J.-H., Cho, B.-H., Yu, G.-J., 2007. New MPPT control strategy for two-stage grid-connected photovoltaic power conditioning system. J. Power Electron. 7 (2).

Campbell, R.C., 2007. A circuit-based photovoltaic array model for power system studies. In: IEEE Power Symposium, 39th North American.

Charles, J.P., Mekkaoui-Alaoui, I., Bordure, G., 1995. A critical study of the effectiveness of the single and double exponential models for *I–V* characterization of solar cells. Sol. State Electron. 28 (8), 807–820.

Enrique, J.M., Durán, E., Sidrach, M., Andŭjar, J.M., Bohorquez, M.A., Carretero, J., 2005. A new approach to obtain *I–V* and *P–V* curves of PV panels by using DC–DC converters. In: IEEE on 31st Photovoltaic Specialists Conference.

Enrique, J.M., Durán, E., Sidrach-de-cardona, M., Andújar, J.M., 2007. Theoretical assessment of the maximum power point tracking efficiency of photovoltaic facilities with different converter topologies. Solar Energy 81, 31–38.

Enslin, J.H.R., Wolf, M.S., Snyman, D.B., Swiegers, W., 1997. Integrated photovoltaic maximum power point tracking converter. IEEE Trans. Indust. Electron. 44 (6), 769–773.

Esram, T., Chapman, P.L., 2007. Comparison of photovoltaic array maximum power point tracking techniques. IEEE Trans. Energy Conver. 22 (2), 439–449.

Faranda, R., Leva, S., 2008. Energy comparison of MPPT techniques for PV systems. WSEAS Trans. Power Syst. 3 (6), 446–455.

Gow, J.A., Manning, C.D., 1999. Development of a photovoltaic array model for use in power-electronics studies. IEE. Proc. Electron. Power Appl. 146 (2).

Hohm, D.P., Ropp, M.E., 2000. Comparative study of maximum power point tracking algorithms using an experimental, programmable, maximum power point tracking tested. In: IEEE Specialists Conference on Photovoltaics, pp. 1699–1702.

Hua, C., Lin, J., 2003. An on-line MPPT algorithm for rapidly changing illuminations of solar arrays. Renew. Energy 28, 1129–1142.

Hua, C., Shen, C., 1998. Study of maximum power point tracking techniques and control of DC/DC converters for photovoltaic power system. IEEE Special. Conf. Power Electron. (1), 86–93.

Jain, S., Agarwal, V., 2007. Comparison of the performance of maximum power point tracking schemes applied to single-stage grid-connected photovoltaic systems. IEEE Trans. Electron. Power Appl. 1 (5), 753–762.

Kawmura, T., Harada, K., Ishihara, Y., Todaka, T., Oshiro, T., Nakamura, H., Imataki, M., 1997. Analysis of MPPT characteristics in photovoltaic power system. Solar Energy Mater. Solar Cells 47, 155–165.

Liu, F., Kang, Y., Zhang, Y., Duan, S., 2008a. Comparison of P&O and hill climbing MPPT methods for grid-connected PV converter. In: IEEE Conference on Industrial Electronics and Applications, pp. 804–807.

Liu, F., Duan, S., Liu, F., Liu, B., Kang, Y., 2008b. A variable step size INC MPPT Method for PV systems. IEEE Trans. Indust. Electron. 55 (7), 2622–2628.

Nema, R.K., Nema, S., Agnihotri, G., 2009. Computer simulation based study of photovoltaic cells/modules and their experimental verification. Int. J. Recent Trends Eng. 1, 151–156.

Saadi, A., Moussi, A., 2007. Optimisation of back–boost converter by MPPT technique with a variable reference voltage applied to photovoltaic water pumping system under variable weather conditions. Asian J. Inf. Technol. 6 (2), 222–229.

Santos, J.L., Antunes, F., Chehab, A., Cruz, C., 2006. A maximum power point tracker for PV systems using a high performance boost converter. Solar Energy 80, 772–778.

Sera, D., Kerekes, T., Teodorescu, R., Blaabjerg, F., 2006. Improved MPPT Algorithms for rapidly changing environmental conditions. In: IEEE Conference on Power Electronics and Motion Control, pp. 1614–1619.

Villalva, M.G., Gazoli, J.R., Filho, E.R., 2009. Modelling; circuit-based simulation of photovoltaic arrays. In: 10th Brazilian Power Electronics Conference COBEP.

Yu, G.J., Jung, Y.S., Choi, J.Y., Kim, G.S., 2004. A novel two-mode MPPT control algorithm based on comparative study of existing algorithms. Solar Energy 76, 455–463.