Mixed-Integer Linear Programming-Based Optimal Configuration Planning for Energy Hub: Starting from Scratch

Article *in* Applied Energy · January 2018

DOI: 10.1016/j.apenergy.2017.08.114

5 authors, including:

Yi Wang
ETH Zurich

Ning Zhang
Tsinghua University

Zhenyu Zhuo
Tsinghua University

Chongqing Kang
Tsinghua University

MILP-based Optimal Configuration Planning for Energy Hub: Starting from Scratch

Author information:
Yi Wang[1], Ning Zhang[1], Zhenyu Zhuo[1], Chongqing Kang[1]*, Daniel Kirschen[2].
1 Department of Electrical Engineering, Tsinghua University, Beijing 100084, China
2 Department of Electrical Engineering, University of Washington, Seattle, Washington 98195, USA
Correspondence and requests for materials should be addressed to C.K. (email: cqkang@tsinghua.edu.cn)

Abstract:
The electric power, gas, and heat systems work on different but complementary time and space scales. They are coupled with each other through energy converters, such as combined heat and power (CHP) devices. The integration of different types of energy systems can be called multiple energy systems (MES). MES are effective to increase the efficiency of energy systems and promote the development of renewable energy sources. During the urbanization process in developing countries, undeveloped districts require multiple types of energy from the beginning, and thus provide an opportunity for MES planning. This paper proposes a novel optimal planning method for a community level MES that "starts from scratch" and jointly determines the optimal generation, conversion and delivery of electricity, heat, cooling, and other services. The energy hub (EH) concept is employed to model the MES and to describe the main planning problem. First, configuration planning of a community level MES is introduced and defined using the EH concept. Then, the planning problem is presented with the objective of minimizing the overall cost, i.e. the sum of the investment and operating costs, with variables that represent the selection of energy converters or storage and their relationships. The model is then formulated as a mixed integer-linear programming (MILP) problem based on graph theory. An illustrative example is provided to describe the functioning of our proposed method. Finally, a numerical case study for the planning of a subsidiary administrative center in Beijing, China is presented to demonstrate the effectiveness and superiority of the proposed method.

Keywords: Demand response, energy hub, energy internet, multiple energy systems, optimal configuration, community energy system

Nomenclature

MES	multiple energy systems
EH	energy hub
CHP	combined heat and power
EB	electric boilers
AB	auxiliary boiler
CCHP	combined cooling, heat, and power
CERG	compression electric refrigerator group
WARG	water absorption refrigerator group
HP	heat pump
TS	thermal storage
$\boldsymbol{L}$	output energy of EH
$\boldsymbol{P}$	input energy of EH
$\boldsymbol{C}$	coupling matrix
P	total number of input ports
Q	total number of output ports
$\boldsymbol{X}$	input-output port incidence matrix
$\boldsymbol{H_g}$	energy conversion characteristics matrix
$\boldsymbol{A_g}$	converter-branch incidence matrix
$\boldsymbol{Z_g}$	energy conversion characteristics matrix
$\boldsymbol{V}$	set of all energy flows
$\boldsymbol{W}_n$	output incidence vector
$\boldsymbol{U}_m$	input incidence vector

1 Introduction

Traditionally, different energy systems, such as electric power, gas, and heat systems, operate almost independently of each other. However, these systems are complementary. For example, electric power is suitable for long distance transmission, but requires real-time balancing, while heat can be easily and efficiently stored but should be locally balanced. To take advantage of the complementary characteristics of different energy systems, the concept of multiple energy systems (MES) promotes optimal interactions between each type over different time and spatial scales [1-3]. MES have been extensively recognized as an effective way to increase the efficiency of an entire energy system and provide more flexibility to accommodate renewable energy sources [4-6].

An MES consists of energy converters, energy storage devices, and an energy distribution networks. Converters transform energy into other forms to meet various energy demands [7]. For example, a combined heat and power (CHP) unit uses gas to produce electricity and heat; heat and electricity can be stored for use at a later time. Networks of pipes and wires transport different types of energy to different locations. Power lines, heat pipes, and gas pipes compose the networks. The operation of MES is constrained by the conversion characteristics of the energy converters (e.g. their efficiencies) and the characteristics of the interconnectors (e.g., power flow equations in electrical power systems, network flow in heat pipes) [8-10].

Countries around the world have set aggressive goals in developing MES. The Department of Energy (DOE) in the United States has proposed an integrated energy system (IES) plan since 2001 [11]. Switzerland launched a research initiative on a “Vision of Future Energy Networks” in 2003 [12]. Denmark has tried to accommodate a high penetration of renewable energy by developing CHP and central heating [13]. In China, the government issued an action plan for the construction of an Energy Internet, where building MES is one of the key tasks [14]. There are many MES demonstration projects in planning or under construction. At the community level, for an MES covering a small area, energy transmission limits can be neglected and the energy conversion and storage can be modeled using the energy hub (EH) concept [15]. An EH models the coupling of different energy systems from an input–output perspective. Scholars around the world have conducted substantial studies on the operation, planning, and evaluation of MES using the EH concept. In this paper, we focus on the planning of an EH.

Joint planning of a MES takes advantage of the synergy of various energy types to improve the utilization of the assets and reduce the planning cost. The purpose of EH planning is to determine whether, when and where to build energy converters and storage devices and how they should be connected to each other [16]. EH models include houses [17], other buildings [18], and communities [19], and the energy converters and storage devices to be planned include CHP units, heat or electricity storage, electric boilers (EB), etc. [20]. Kienzle et al. quantified the value of investments in an EH through Monte Carlo simulation and optimal dispatch [21]. Geidl et al. proposed a nonlinear optimization model to determine their structure [22]. A topological optimization problem is formulated to obtain optimal connections of the converter, and a simple ad hoc solution is proposed to overcome the problem of infinite solutions in [23]. Shahmohammadi et al. put forward a comprehensive linearized model for optimal design of an EH considering reliability constraints [24].

Investigating the optimal size of energy converters and storage devices is another typical planning problem for an EH. Sheikhi et al. proposed a cost/benefit analysis approach to optimize energy converters based on reinforcement learning to determine the capacities of the CHP, auxiliary boiler (AB), absorption chiller, and transformer [25]. Bahrami et al. established an optimization model to find the optimal size and operation of a combined cooling, heat, and power (CCHP) and AB for buildings. A hospital is used as an example to verify the proposed method [26]. EH is used to model a hotel building in San Francisco and a residential building in [27] and [28], respectively, where the CHP capacity is optimized. Beyond planning for a single EH, Pazouki et al. proposed optimal CHP placement and sizing in a multiple energy network considering network reliability, power losses, and voltage profiles [29]. Salimi et al. formulated an optimal EH planning model in an interconnected natural gas and electricity system [30]. Zhang et al. expanded the concept of EH by determining appropriate investment candidates for generating units, transmission lines, natural gas furnaces and CHPs [31]. Qiu et al. provided a linear expansion model to minimize the overall capital and operating costs for coupled gas and power systems [32].

Although a substantial number of papers discuss the optimal planning of an EH, to the best of our knowledge, this is the first paper that discusses the optimal configuration planning of a community level MES starting from scratch to jointly determine what kinds of converters to choose, what their capacity should be, and how they should be connected. The method proposed in this paper addresses two challenges: 1) the configuration of the energy converters and storage devices is unknown, and it is difficult to integrate the configuration optimization into a conventional planning model; 2) existing optimal EH planning approaches involve mixed-integer nonlinear programming (MINLP), which are obviously difficult to solve.

In light of the above, the contributions of this paper are summarized as follows:

1) A novel optimal configuration planning model for an EH that starts from scratch is originally proposed to jointly determine the energy generation, conversion and delivery of a community level MES.
2) Graph theory and branch energy flow based EN modeling method is proposed to flexibly formulate the characteristics and topology of the energy converters and storages.
3) The nonlinear problem is transformed into a mixed integer-linear programming (MILP) problem based on big M method. This results in tractable computations and is extendable to various purposes for EH planning.
4) A real-world case of community level MES planning in a subsidiary administrative center of Beijing, China is carried out.

The organization of the rest of this paper is as follows: Section 2 defines the “planning from scratch” problem. Section 3 introduces the branch energy flow based EH modeling method. Section 4 describes in detail the mathematical formulation of the planning problem. Section 5, demonstrates the proposed method using an example. Section 6 uses a case study for an actual subsidiary administrative center in Beijing, China to demonstrate the effectiveness and superiority of the proposed method. Finally, conclusions are drawn and future work is described in Section 7.

2 Problem Statement

Optimal EH configuration planning differs from the typical EH planning problem or power system planning problem in two ways: 1) Traditionally, part of the configuration of the EH and the types of energy converters have already been decided. In this study, there is no presumption about the configuration or the converters to be chosen for the EH. 2) Most of the existing literature only optimizes the capacity of the converters. In this paper, we optimize simultaneously the capacity of the converters and the configuration of the EH. Planning an EH "starting from scratch" means that no a priori assumptions are made about the choice of the energy converters and energy flow configuration, i.e. the overall EH is a blank sheet of paper before planning. The choice of converter types and capacities and how they are connected is optimized only on the forecasted input energy prices and output energy demands.

Figure 1 provides a general illustration of the proposed planning problem. Initially, the EH is empty. Various energy converters and storage devices with different capacities, efficiencies, and investment costs can be selected and connected to each other. The converters include CHP units, gas boilers, EB, heat pumps, transformers, absorption chillers, air conditioners, power to gas units, etc. The storage devices include heat storage and electricity storage. The demands for heat, cooling, and electricity can be forecasted and are used as boundary conditions of the proposed planning problem. The prices of the input energy sources, such as electricity and gas, are also known.

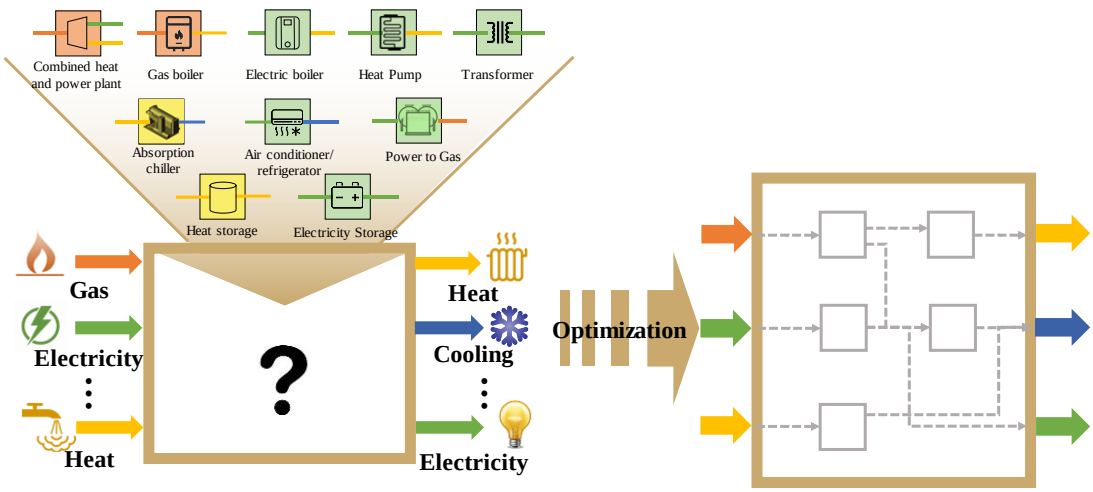

Figure 1. Illustration of EH planning starting from scratch.

Optimal configuration planning of an EH determines which energy converters should be selected and how they should be connected to minimize the overall cost, i.e. the sum of the investment and operating costs, for given energy demands and prices. The problem can be stated as follows:

Given: 1) demands for electricity, heat, and cooling; 2) prices for the input energy sources, including electricity and gas; 3) capacities, efficiencies, and investment costs of the energy converters and storage devices to be selected.

Determine: 1) the selected energy converters and storage devices; 2) their optimal

configurations; 3) their optimal operating status within the planned configurations.

Without loss of generality, the following assumptions are made to simplify the analysis and the mathematical formulation:

1) The operating cost can be represented or estimated using typical scenarios of load and price profiles;
2) Only the efficiencies of the energy converters are considered. The heat and gas network is not considered in the planning model [31] because the EH is intended for a building or a community-level MES.

3 Energy Hub Model

As shown in Fig. 2, the EH concentrates the converters and storage devices into a "black box" with input ports and output ports. Different types of energy converters and energy storage devices can be optimally configured to support the conversion and coupling of multiple energy systems. An EH consists of three elements: energy converters, energy storage devices, and their connections. The EH is such a simple and elegant method that it has received much attention since it was proposed.

Fig. 3 shows a simple MES modeled by an EH [33]. It consists of a CHP, an electric power transformer, an AB, and a heat exchanger. The input energy sources include electricity, heat and gas; the output energy includes electricity and heat.

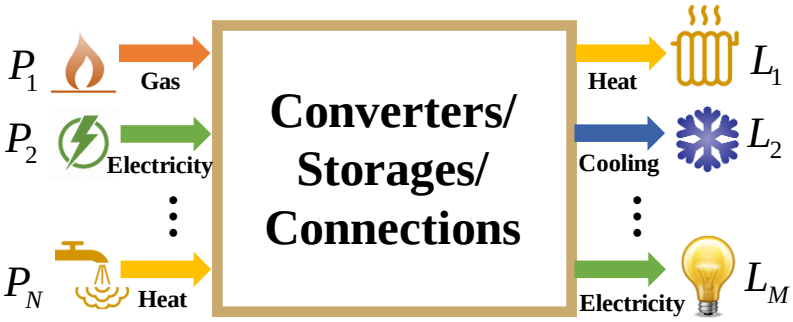

Figure 2. Dual port "black box" model of an EH.

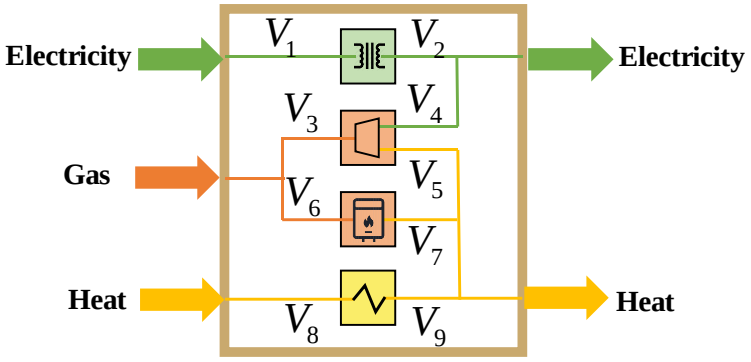

Figure 3. A simple MES modeled by an EH.

3.1 Coupling Matrix Modeling

In an EH, the coupling between output energy sources $\boldsymbol{L}$ and input energy $\boldsymbol{P}$ can be formulated linearly using coupling matrix $\boldsymbol{C}$ [33]:

$$\boldsymbol{L} = \boldsymbol{CP} \tag{1}$$

More specifically, for an EH with M types of input energy and N types of output energy, Eq. (1) can be rewritten as follows:

$$\begin{bmatrix} L_1 \\ L_2 \\ \vdots \\ L_M \end{bmatrix} = \begin{bmatrix} c_{11} & c_{12} & \cdots & c_{1N} \\ c_{21} & c_{22} & \cdots & c_{2N} \\ \vdots & \vdots & \ddots & \vdots \\ c_{M1} & c_{M2} & \cdots & c_{MN} \end{bmatrix} \begin{bmatrix} P_1 \\ P_2 \\ \vdots \\ P_N \end{bmatrix} \tag{2}$$

where P_n and L_m denote the n-th type of input energy source and the m-th type of output energy, respectively; c_{mn} denotes the coupling factor.

The coupling factor is a combination of the dispatch and efficiency factors. Efficiency is determined by the characteristics of the energy converters. The dispatch factor represents the operating status of the EH. For example, in Fig. 3, the proportion of gas that feeds the CHP and AB corresponds to a dispatch factor. With known demands for electricity, gas, and heat, the EH model can adjust the dispatch factors of the EH to minimize the operating cost. The coupling relationship between input and output energies in Fig. 3 can be formulated as follows:

$$\begin{bmatrix} L_e \\ L_h \end{bmatrix} = \begin{bmatrix} \eta_T & \alpha\eta_W & 0 \\ 0 & \alpha\eta_Q + (1-\alpha)\eta_{AB} & \eta_{HT} \end{bmatrix} \begin{bmatrix} P_e \\ P_g \\ P_h \end{bmatrix} \tag{3}$$

where P_e, P_g, and P_h denote the input electricity, gas, and heat; L_e and L_h denote the output electricity and heat; η_T, η_{AB}, and η_{HT} denote the efficiencies of the electric transformer, AB, and heat exchanger; η_W and η_Q denote the efficiencies of gas to electricity and heat in the CHP; and α denotes the dispatch factor between the gas feeding the CHP and AB.

In the optimal operation of the EH, both the dispatch factor α in the coupling matrix and the input energy $\boldsymbol{P}$ in the right-hand vector are decision variables. The multiplication of two or more decision variables in Eq. (1) makes the operation problem nonlinear. In addition, the coupling matrix is influenced by the configurations of the energy converters and storage devices. The coupling factors in the coupling matrix cannot be formulated before the configuration is determined. In the following sections, we propose a graph theory-based configuration modeling method and select the energy flow as a state variable to cast this problem as an MILP problem.

3.2 Branch Energy Flow Modeling

3.2.1 Input-Output Port Incidence Matrix

To describe the configuration of the energy converters and storage devices, the definitions of port and branch are given based on graph theory. Fig. 4 shows a conceptual configuration of energy converters and storage devices in the EH, where each block corresponds to an energy converter or storage. We define a **port** as the input or output port of the energy converter or storage. Each energy converter has at least one input port and one output port, which are marked in blue and orange, respectively, in Fig. 4. We also define a **branch** as the virtual energy flow from one output port of an energy converter or storage to one input port of another energy converter or storage, which is represented by an arrow. For example, there are 9 branches in the EH shown of Fig. 3. The **source** of a branch is an output port; the **sink** of a branch is an input port. Note that a port can be connected to more than one branch. Energy inputs of the overall EH can be viewed as special output ports, while energy outputs can be viewed as special input ports.

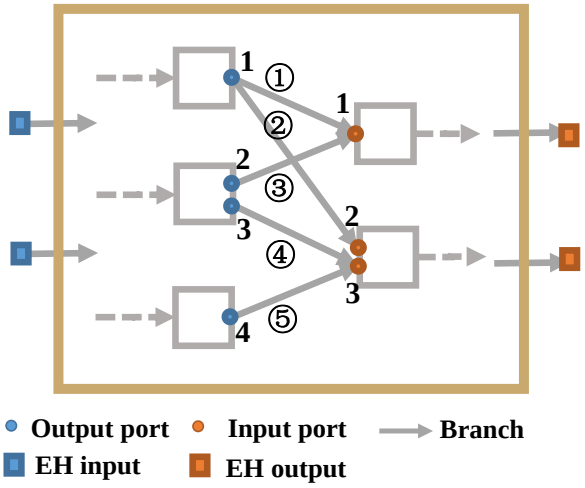

Figure 4. Conceptual configuration of energy converters and storage devices in the EH.

First, we index the input and output ports of all the energy converters and storage devices in sequence starting from 1. The total number of input ports and output ports of all the energy converters and storage devices are denoted by p_{ip} and q_{op}, respectively, and the number of types of energy input and output of the EH are denoted by q_{in} and p_{out}, respectively. The direction of a branch energy flow is always from an output port to an input port, except that some branches are directly fed from the energy input to the EH e.g. v_1 in Figure 3, or directly supply the output of the EH, e.g. v_2 in Figure 3. Therefore, the energy inputs to the EH can be broadly treated as output ports because they serve as sources for branches. Similarly, the energy outputs of the EH can be treated as input ports because they serve as sinks for some branches. Thus, the total number of generalized input ports P and generalized output ports Q are:

$$P = p_{ip} + p_{out} \tag{4}$$

$$Q = q_{in} + q_{op} \tag{5}$$

On this basis, an input-output port incidence matrix $\boldsymbol{X}_{P\times Q}$ can be defined to describe the configuration of the energy converters and storage devices in the EH. The elements of matrix $\boldsymbol{X}$ $x_{p,q}$ define the connections between the *p*-th output port and *q*-th input port. If the *p*-th output port is connected to the *q*-th input port, $x_{p,q}$ =1, or else, $x_{p,q}$ =0.

$$\begin{array}{c|c}
 & \begin{array}{cccccccc} \textbf{\#1} & & \textbf{\#2} & & \textbf{\#3} & \cdots & \textbf{\#N} & \textbf{Output} \end{array} \\
\begin{array}{c} \textbf{Input} \\ \\ \textbf{\#1} \\ \textbf{\#2} \\ \vdots \\ \textbf{\#N-1} \\ \\ \textbf{\#N} \end{array} &
\begin{bmatrix}
x_{1,1} & x_{1,2} & x_{1,3} & x_{1,4} & \cdots & x_{1,Q-2} & x_{1,Q-1} & x_{1,Q} \\
x_{2,1} & x_{2,2} & x_{2,3} & x_{2,4} & \cdots & x_{2,Q-2} & x_{2,Q-1} & x_{2,Q} \\
x_{3,1} & x_{3,2} & x_{3,3} & x_{3,4} & \cdots & x_{3,Q-2} & x_{3,Q-1} & x_{3,Q} \\
x_{4,1} & x_{4,2} & x_{4,3} & x_{4,4} & \cdots & x_{4,Q-2} & x_{4,Q-1} & x_{3,Q} \\
\vdots & \vdots & \vdots & \vdots & \ddots & \vdots & \vdots & \vdots \\
x_{P-2,1} & x_{P-2,2} & x_{P-2,3} & x_{P-2,4} & \cdots & x_{P-2,Q-2} & x_{P-2,Q-1} & x_{P-2,Q} \\
x_{P-1,1} & x_{P-1,2} & x_{P-1,3} & x_{P-1,4} & \cdots & x_{P-1,Q-2} & x_{P-1,Q-1} & x_{P-1,Q} \\
x_{P,1} & x_{P,2} & x_{P,3} & x_{P,4} & \cdots & x_{P,Q-2} & x_{P,Q-1} & x_{P,Q}
\end{bmatrix}
\end{array} \tag{6}$$

Since only a small proportion of the output and input ports are connected, there are a large number of zero elements in $\boldsymbol{X}_{P\times Q}$, i.e., the input-output port incidence matrix $\boldsymbol{X}$ is sparse. The number of non-zero elements is equal to the number of branches in the EH. In the proposed planning model, the elements of matrix $\boldsymbol{X}$ are treated as binary decision variables.

3.2.2 Energy Flow Equations for the EH

As stated above, for a coupling matrix based EH model [33], dispatch factors α are selected as state variables which leads to a non-linear optimal operation model. In this paper, we select the energy flows as state variables to represent the operating status of the EH. If the energy flow in the *l*-th branch is V_l and the set of all energy flows is $\boldsymbol{V}$, using the EH of Fig. 3 as an example, for the CHP and AB, we have:

$$\begin{aligned}
&V_4 = \eta_W V_3, \quad V_5 = \eta_Q V_3 \\
&V_7 = \eta_W V_6 \\
&V_3 + V_6 = P_g
\end{aligned} \tag{7}$$

Eq. (7) is linear in terms of the state variables V_3 and V_6. From an energy flow perspective, the operation of any energy converter can be represented by a linear combination of all the energy flows $\boldsymbol{V}$. The operation of the EH is then linear. Generally, the energy flow vector can be extended to $P\times Q$ energy flows, where the zero elements denote to unconnected branches.

To formulate linear energy flow equations for an EH, we introduce two matrices to describe the connection relationship and energy conversion characteristics of the energy converters.

For each energy converter, a converter-branch incidence matrix $\boldsymbol{A_g}$ is defined to describe how the energy converter is connected by branches. The number of rows of this matrix is equal to the total number of input and output ports of the energy converter. Its number of columns is equal to the total number of possible branches ($L = P \times Q$). The elements of matrix $\boldsymbol{A_g}$, a_{ij} indicate the connection status of the *i*-th input/output port of this energy converter and *j*-th branch. If the *i*-th input/output port of this energy converter is connected to the *j*-th branch, a_{ij} =1 or -1, or else, a_{ij} =0.

We rank all the branches as follows:

$$\left[branch(1,1), branch(1,2), ..., branch(1,Q), branch(2,1), branch(2,2), ..., branch(P,Q)\right]$$

A comparison between the definitions of $\boldsymbol{A_g}$ and $\boldsymbol{X}$ shows that $\boldsymbol{A_g}$ can be formulated with the elements of $\boldsymbol{X}$ mathematically:

$$a_{i,l} = \begin{cases} x_{p,q}, & if\ \ i\text{-}th\ port\ is\ input\ port\ \ and\ its\ index\ is\ p \\ -x_{p,q}, & if\ \ i\text{-}th\ port\ is\ output\ port\ and\ its\ index\ is\ p \end{cases},\ l=P(q-1)+p \tag{8}$$

For simplicity, in the following, we also use x_l to indicate $x_{p,q}$ if $l=P(q-1)+p$.

An energy conversion characteristics matrix $\boldsymbol{H_g}$ is defined to describe the *g*-th energy conversion characteristics of each energy converter. Its number of rows is equal to the number of energy conversion processes. Its number of columns is equal to the total number of input and output ports. Table 1 shows the matrices of energy conversion characteristics of some common converters:

Table 1. Branch Table of the EH in Fig. 2

Converter	Parameters	$\boldsymbol{H_g}$
CHP	$\eta_{\mathrm{Q}} / \eta_{\mathrm{W}}$	$\boldsymbol{H}_1 = \begin{bmatrix} \eta_{\mathrm{W}} & 1 & 0 \\ \eta_{\mathrm{Q}} & 0 & 1 \end{bmatrix}$
AB	η_{AB}	$\boldsymbol{H}_2 = \begin{bmatrix} \eta_{\mathrm{AB}} & 1 \end{bmatrix}$
CERG	η_{CE}	$\boldsymbol{H}_3 = \begin{bmatrix} \eta_{\mathrm{CE}} & 1 \end{bmatrix}$
WARG	η_{R}	$\boldsymbol{H}_4 = \begin{bmatrix} \eta_{\mathrm{R}} & 1 \end{bmatrix}$
Storage	η_{C}, η_{D}	$\boldsymbol{H}_5 = \begin{bmatrix} \eta_{\mathrm{C}} & 1/\eta_{\mathrm{D}} & 1 \end{bmatrix}$

Multiplying the converter-branch incidence matrix and the energy conversion characteristics matrix gives the operating status of each energy converter:

$$\boldsymbol{Z}_g = \boldsymbol{H}_g \boldsymbol{A}_g \tag{9}$$

The energy conservation of each converter can be written in the following matrix form:

$$\boldsymbol{Z}_g \boldsymbol{V} = \boldsymbol{0} \tag{10}$$

Taking the CHP in Fig. 3 as an example, the converter-branch incidence matrix for the CHP is a 3×9 dimensional matrix:

$$\boldsymbol{A}_g = \begin{bmatrix} 0 & 0 & 1 & 0 & 0 & 0 & 0 & 0 & 0 \\ 0 & 0 & 0 & -1 & 0 & 0 & 0 & 0 & 0 \\ 0 & 0 & 0 & 0 & -1 & 0 & 0 & 0 & 0 \end{bmatrix} \tag{11}$$

Then, the operating status of the CHP is:

$$\boldsymbol{Z}_g = \begin{bmatrix} 0 & 0 & \eta_{\mathrm{W}} & -1 & 0 & 0 & 0 & 0 & 0 \\ 0 & 0 & \eta_{\mathrm{Q}} & 0 & -1 & 0 & 0 & 0 & 0 \end{bmatrix} \tag{12}$$

Finally, according to Eq. (10), we have the same equations as Eq. (7):

$$\begin{aligned} \eta_{\mathrm{W}} V_3 - V_4 = 0 \\ \eta_{\mathrm{Q}} V_3 - V_5 = 0 \end{aligned} \tag{13}$$

For the energy storage devices, the state of charge (SOC) must be taken into consideration:

$$\boldsymbol{Z}_g \boldsymbol{V} = \Delta E_g \tag{14}$$

Eqs. (10) and (14) describe the operation of energy converters and storage devices and the linear representation of energy input and output of an EH, making the model linear by introducing the energy flow $\boldsymbol{V}$. This modeling method for an EH is integral to our proposed planning model.

In addition to the operating status of the energy converters and storage devices, correspondence between the input energy sources of the EH and branches in the EH should also be modeled:

Finally, we define the L-dimensional *input incidence vector* $\boldsymbol{U}_m$ to relate the m-th energy input to the branch energy flows and the L-dimensional *output incidence vector* $\boldsymbol{W}_n$ to link the n-th energy output to the branch energy flows:

$$U_{m,l} = \begin{cases} 1 & \text{if the } m\text{-th input node is source of branch } l \\ 0 & \text{otherwise} \end{cases} \tag{15}$$

$$W_{n,l} = \begin{cases} 1 & \text{if the } n\text{-th output energy is sink of branch } l \\ 0 & \text{otherwise} \end{cases} \tag{16}$$

The input incidence and output incidence equations are:

$$P_m = \boldsymbol{U}_m \boldsymbol{V} \tag{17}$$

$$L_n = \boldsymbol{W}_n \boldsymbol{V} \tag{18}$$

4 EH Configuration Planning Model

In this section, we describe in detail the model for the optimal configuration planning problem based on the linear modeling method for an EH. First, the formulation of the objective

function is proposed, and then, the investment constraints and operation constraints are provided. Finally, the proposed nonlinear method is transformed into an MILP problem that can be easily solved by an MILP solver, such as CPLEX, Gurobi, and YAMIP [34].

4.1 Objective Function

The objective of EH planning is to minimize the overall cost, including the investment cost of energy converters and storage devices C_I and the operating cost C_O to meet demands:

$$TC = C_I + C_O \tag{19}$$

4.1.1 Investment cost

The investment cost is annualized considering the interest rate and its payback period:

$$C_I = \sum_{g=1}^{G} \frac{r(1+r)^K}{(1+r)^K - 1} C_g I_g \tag{20}$$

where g is the index for energy converters or storage devices; G is the total number of energy converters and storage devices to be selected; K denotes the payback period of energy converter investment; r denotes the interest rate used in calculating the annualized investment cost; I_g is a binary variable that equals 1 if the g-th energy converter or storage is selected and 0 otherwise; C_g is the investment cost of the g-th energy converter or energy storage.

4.1.2 Operating cost

The operating cost is estimated by the cost of energy needed in multiple scenarios:

$$C_O = \sum_{s=1}^{S} \sum_{t=1}^{T} \sum_{m=1}^{M} \omega_s f_{m,t,s} P_{m,t,s} \tag{21}$$

where m, t, and s are the indexes for the type of energy input of the EH, the time period (for example 1 hour), and the scenarios, respectively; M, T, and S denote the total number of types of energy input, the total number of time periods (for example 24 hours), and the total number of selected scenarios, respectively; $P_{m,t,s}$ and $f_{m,t,s}$ denote the m-th type of input energy and the corresponding price of the s-th scenario at the t-th time period, respectively; and ω_s denotes the days that the s-th scenario can represent. The sum of all ω_s is equal to 365 days (an entire year).

4.2 Constraints

The constraints include the operating constraints on the whole EH and the investment

constraints on the energy converters and storage devices.

4.2.1 Operation constraints on the energy converters and storage devices

For each energy converter or storage device at any time in any scenario, we have:

$$\boldsymbol{H}_g \boldsymbol{A}_{g,t,s} \boldsymbol{V}_{t,s} = \boldsymbol{0} \ \ \forall g \in \Omega_C, t, s \tag{22}$$

$$\boldsymbol{H}_g \boldsymbol{A}_{g,t,s} \boldsymbol{V}_{t,s} = \Delta \boldsymbol{E}_{g,t,s} \ \ \forall g \in \Omega_S, t, s \tag{23}$$

where Ω_C and Ω_S are the index to the sets of energy converter and storage devices.

Each energy converter or storage must operate within its capacity:

$$\boldsymbol{0} \le \boldsymbol{A}_{g,t,s} \boldsymbol{V}_{t,s} \le \boldsymbol{C}_{\max g} \ \ \forall g, t, s \tag{24}$$

where $\boldsymbol{A}_{g,t,s} \boldsymbol{V}_{t,s}$ denotes the energy flow of the ports of the *g*-th energy converter; $\boldsymbol{C}_{\max g}$ denotes the capacity of the *g*-th energy converter or the maximum charging and discharging rate of the *g*-th energy storage device.

For each scenario, the operation of the storage devices is constrained by their SOC:

$$\boldsymbol{E}_{g,t,s} = \boldsymbol{E}_{g,(t-1),s} + \Delta \boldsymbol{E}_{g,t,s} \ \ \forall g \in \Omega_S, t, s \tag{25}$$

$$\boldsymbol{E}_{g,\min} \le \boldsymbol{E}_{g,t,s} \le \boldsymbol{E}_{g,\max} \ \ \forall g \in \Omega_S, t, s \tag{26}$$

where $\boldsymbol{E}_{g,t,s}$ denotes the energy stored in the *g*-th energy storage device in scenario *s* at time period *t*; $\boldsymbol{E}_{g,\min}$ and $\boldsymbol{E}_{g,\max}$ denote the minimum and maximum energy that can be stored in the *g*-th energy storage device.

The energy inputs and outputs of the EH can be represented by the linear combination of the energy flows inside the EH:

$$P_{m,s,t} = U_{m,s,t} V_{s,t} \ \ \forall m, t, s \tag{27}$$

$$L_{m,s,t} = W_{m,s,t} V_{s,t} \ \ \forall m, t, s \tag{28}$$

The energy outputs must meet or exceed the energy demands $L'_{m,s,t}$:

$$L_{m,s,t} \ge L'_{m,s,t} \ \ \forall m, t, s \tag{29}$$

4.2.2 Investment constraints

If one of the branches of an energy converter has a non-zero energy flow, it means that this energy converter has been selected:

$$0 \le 1 - \prod_{l \in g} (1 - x_l) \le I_g \tag{30}$$

where $\prod_{l \in g} (1 - x_l)$ is equal to zero if any x_l is equal to one, i.e., the branch connected to the *g*-th energy converter or storage has a non-zero energy flow.

Since the branch can only convey one type of energy, there is a constraint that the type of energy of a branch source should be the same as the type of the energy of the branch sink. If the type of the *p*-th energy output is the same as the type of the *q*-th energy input, the connection indicator $x_{p,q}$ can be 1 or 0:

$$x_{p,q} \in \{0,1\} \tag{31}$$

If the type of the *p*-th energy output is different from the type of the *q*-th energy input, they cannot be connected and the connection indicator $x_{p,q}$ should be set to 0:

$$x_{p,q} = 0 \tag{32}$$

4.3 Decision Variables

The proposed planning model simultaneously selects suitable energy converters and storage devices, determines their connection relationships and provides operating strategies for different scenarios. Thus, the decision variables include:

1) Binary variable I_g indicating whether the *g*-th energy converter or storage device is selected.

2) Binary variable $x_{p,q}$ indicating whether the *p*-th output port is connected to the *q*-th input port. Note that the converter-branch incidence matrix $\boldsymbol{A}$ is formulated using $x_{p,q}$.

3) Continuous variable $\boldsymbol{V}_{t,s}$ for the energy flow of scenario *s* at time *t*.

Since there are products of binary variable and continuous variable in Eq. (22)-(24) and a multiplication of several binary variables in Eq. (30), this model leads to a MINILP problem. In the following, we use the big *M* method to linearize this problem.

4.4 Model Linearization

First, we define $\boldsymbol{X}'$ and $\boldsymbol{A}'_{g,t,s}$ to indicate the virtual connections of the converters and storage devices. If the type of the *p*-th energy output is the same as the type of the *q*-th energy input, $x'_{p,q}$=1, or else $x'_{p,q} = 0$. Then, $\boldsymbol{A}'_{g,t,s}$ can be formulated according the same rule as Eq.

(8). $\boldsymbol{A}'_{g,t,s}$ is thus a constant matrix where the elements are 0, 1 or -1.

For Eqs. (22)-(24), $\boldsymbol{A}_{g,t,s}$ is replaced by $\boldsymbol{A}'_{g,t,s}$:

$$\boldsymbol{H}_g \boldsymbol{A}'_{g,t,s} \boldsymbol{V}_{t,s} = \boldsymbol{0} \ \ \forall g \in \Omega_C, t, s \tag{33}$$

$$\boldsymbol{H}_g \boldsymbol{A}'_{g,t,s} \boldsymbol{V}_{t,s} = \Delta \boldsymbol{E}_{g,t,s} \ \ \forall g \in \Omega_S, t, s \tag{34}$$

$$\boldsymbol{0} \le \boldsymbol{A}'_{g,t,s} \boldsymbol{V}_{t,s} \le \boldsymbol{C}_{\max g} \ \ \forall g, t, s \tag{35}$$

For each branch, we introduce big M_1 to indicate whether the branch is connected or not:

$$0 \le V_{l,t,s} \le x_l M_1 \ \ \forall l, t, s \tag{36}$$

This equation shows that if the l-th branch energy flow is non-zero at any time period in any scenario, the indicator x_l should be equal to 1, which means that the l-th branch has been connected.

Eq. (30) can be transformed into Eq. (37) by introducing another big M_2:

$$0 \le \sum_{l \in g} x_l \le I_g M_2 \ \ \forall l, g \tag{37}$$

This equation shows that if the l-th branch energy flow is connected, the indicator I_g should be equal to 1, which means that the g-th energy converter or storage device has been selected.

Finally, the proposed planning model can be linearized as follows:

$$\begin{aligned} &OF: Eq.(19) \\ &s.t. Eqs.(20)-(21),\ (25)-(29),\ (31)-(37) \end{aligned} \tag{38}$$

Fig. 1 summarizes the structure of the proposed model. The blocks marked in gray are filled with non-zero elements; the other elements of this matrix are zero. Several typical scenarios that can be constructed by clustering historical data for the daily load and price are used to represent the operating cost of the planned EH. The investment decision variables and connection relationship variables are coupled by Eq. (36); the connection relationship variables and operating scenarios are coupled by Eq. (37); the operations of different scenarios are independent of each other.

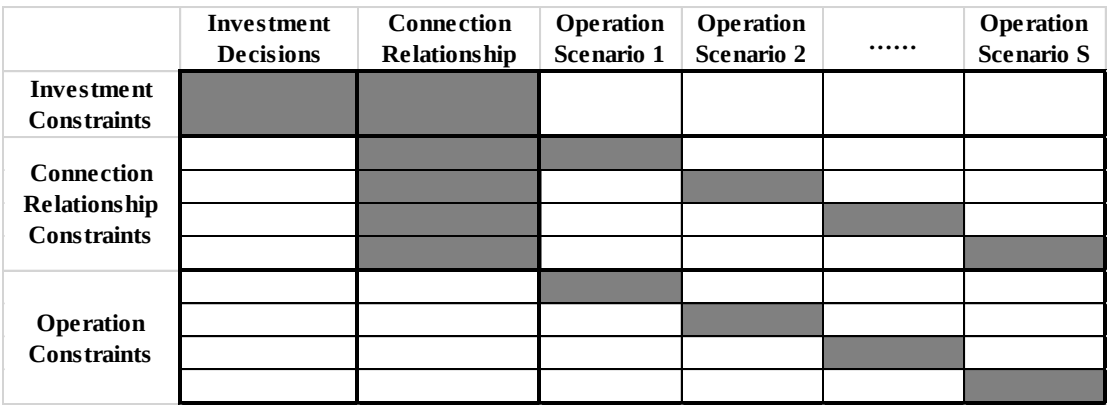

Figure 5. Structure of the proposed model.

Note that even through the proposed model is established for planning starting from scratch, it is also applicable to the planning problem with some known information. For example, if there are predetermined energy converters or storage devices, the corresponding indicator I_g can be set to 1 directly; if several connection relationships are predetermined, the corresponding indicator $x_{p,q}$ must also be set to 1.

In addition, there may be some uncertainties on demands and prices that may not be captured the proposed deterministic planning method. Generating more scenarios is an effective way to cover future uncertainties on energy demands and prices. Our proposed method can be easily extended to multiple scenarios and guarantees that the model can still be solved as a MILP problem. In this way, our proposed method can be transformed into a probabilistic planning problem to tackle the challenges of future energy demands and prices uncertainties.

5 Illustrative Example

This section uses a simple example to demonstrate the proposed planning method, especially the EH modeling.

5.1 Input Data

The input energy sources of an EH include power and gas, while the output energy or demand of an EH include power, heat and cooling [35]. Note that to simplify the formulation and calculation of energy flows, the units of electricity, gas, heat, and cooling have all been transformed into kilowatt (kW) or kilowatt hour (kWh). Fig. 6 illustrates the three scenarios that represent the operating conditions over the lifecycle of the system. The weights of the summer and winter scenarios are 365/4; the weight of the intermediate scenario is 365/2. For simplicity, the return years of all the elements in the MES is set to 10 with a discount rate of 0.06.

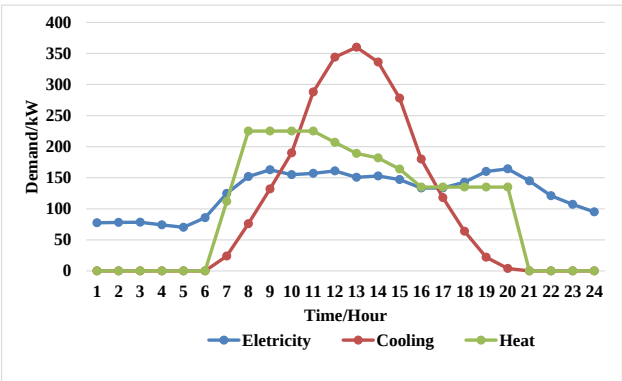

(a) Summer

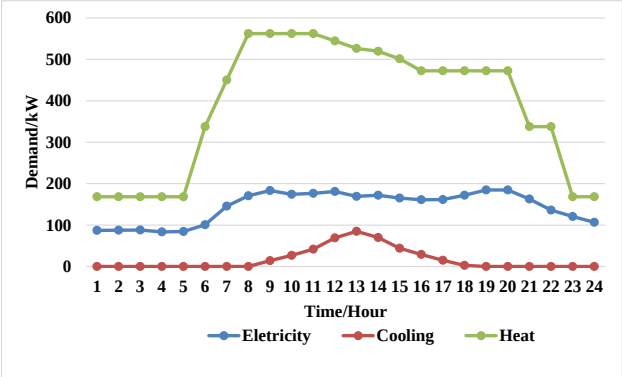

(b) Winter

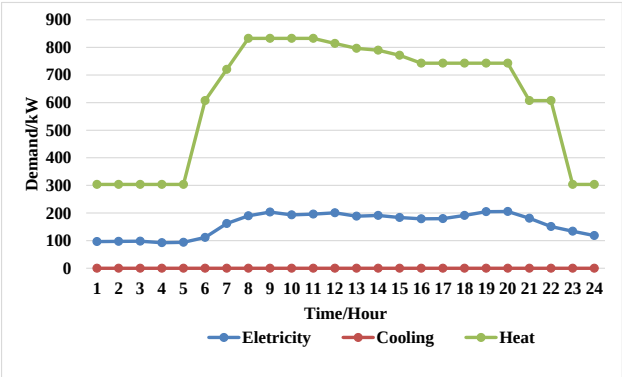

(c) Intermediate

Figure 6. Three typical demands for electricity, cooling and heat.

The corresponding electricity prices for the three scenarios are given in Fig. 7. The gas price is set to 20 Euro/MWh and kept constant over the planning years. Six candidate devices can be selected to construct the EH. Table 2 gives the parameters and cost of these converters.

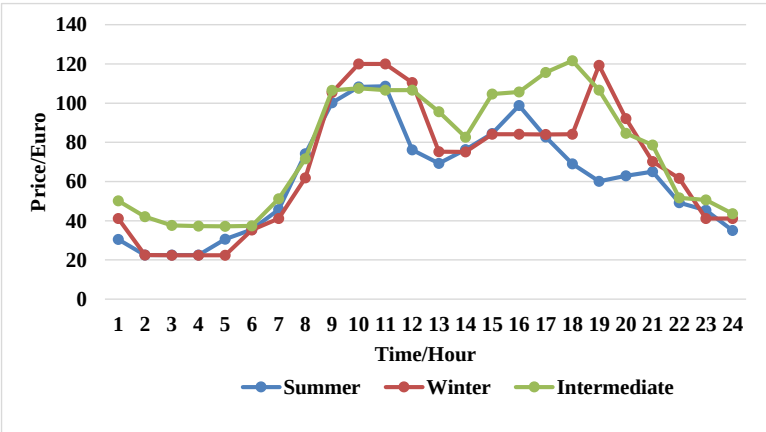

Figure 7. Electricity price of the three scenarios.

Table. 2. Parameters and costs of the energy converters to be selected.

No.	Type	Parameters	Capacities(kW)	Costs (Euro)
1	CHP	0.3, 0.45	300, 450	430000
2	AB	0.8	900	76500
3	CERG	3	400	48000
4	WARG	0.7	400	48000
5	HP	2	400	60000
6	EB	0.9	400	48000

5.2 Results

Based on the converters to be selected and the inputs and outputs of the EH, the virtual input-output port incidence matrix $\boldsymbol{X}'_{P\times Q}$ can be written as follows:

$$\begin{array}{c} \\ \textbf{Input} \\ \\ \textbf{CHP} \\ \\ \textbf{AB} \\ \textbf{CERG} \\ \textbf{WARG} \\ \textbf{HP} \\ \textbf{EB} \end{array} \begin{array}{c} \begin{array}{ccccccccc} \textbf{CHP} & \textbf{AB} & \textbf{CERG} & \textbf{WARG} & \textbf{HP} & \textbf{EB} & & \textbf{Output} & \end{array} \\ \begin{bmatrix} 0 & 0 & 1 & 0 & 1 & 1 & 1 & 0 & 0 \\ 0 & 1 & 1 & 0 & 0 & 0 & 0 & 0 & 0 \\ 0 & 0 & 1 & 0 & 1 & 1 & 1 & 0 & 0 \\ 0 & 0 & 0 & 1 & 0 & 0 & 0 & 1 & 0 \\ 0 & 0 & 0 & 1 & 0 & 0 & 0 & 1 & 0 \\ 0 & 0 & 0 & 0 & 0 & 0 & 0 & 0 & 1 \\ 0 & 0 & 0 & 0 & 0 & 0 & 0 & 0 & 1 \\ 0 & 0 & 0 & 1 & 0 & 0 & 0 & 1 & 0 \\ 0 & 0 & 0 & 1 & 0 & 0 & 0 & 1 & 0 \end{bmatrix} \end{array} \tag{39}$$

20 potential branches can be planned in the EH . Then, the converter-branch incidence matrix $\boldsymbol{A}'_{\boldsymbol{g}}$ of the CHP is:

$$\boldsymbol{A}'_{g1} = \begin{bmatrix} 0 & 1 & 0 & 0 & 0 & 0 & 0 & 0 & 0 & 0 & 0 & 0 & 0 & 0 & 0 & 0 & 0 & 0 & 0 & 0 \\ 0 & 0 & -1 & -1 & 0 & 0 & 0 & 0 & 0 & 0 & 0 & 0 & 0 & 0 & 0 & 0 & 0 & 0 & 0 & 0 \\ 0 & 0 & 0 & 0 & -1 & -1 & -1 & -1 & 0 & 0 & 0 & 0 & 0 & 0 & 0 & 0 & 0 & 0 & 0 & 0 \end{bmatrix} \tag{40}$$

The converter-branch incidence matrices of the other converters can be formulated accordingly. The input incidence vector and output incidence vector are:

$$\boldsymbol{U} = \begin{bmatrix} 1 & 0 & 0 & 0 & 0 & 0 & 0 & 0 & 0 & 0 & 0 & 1 & 0 & 0 & 1 & 0 & 0 & 0 & 0 & 0 \\ 0 & 1 & 0 & 0 & 0 & 0 & 0 & 0 & 1 & 0 & 0 & 0 & 0 & 0 & 0 & 0 & 0 & 0 & 0 & 0 \end{bmatrix} \tag{41}$$

$$\boldsymbol{W} = \begin{bmatrix} 1 & 0 & 0 & 0 & 1 & 0 & 0 & 0 & 0 & 0 & 0 & 0 & 0 & 0 & 0 & 0 & 0 & 0 & 0 & 0 \\ 0 & 0 & 0 & 0 & 0 & 0 & 0 & 0 & 0 & 0 & 0 & 0 & 1 & 1 & 0 & 0 & 0 & 0 & 0 & 0 \\ 0 & 0 & 1 & 0 & 0 & 0 & 0 & 0 & 0 & 1 & 0 & 0 & 0 & 0 & 0 & 1 & 0 & 0 & 1 & 0 \end{bmatrix} \tag{42}$$

Solving this optimization problem using CPLEX leads to the conclusion that CHP, AB,

CERG, and HP converters should be connected as shown in Fig. 8.

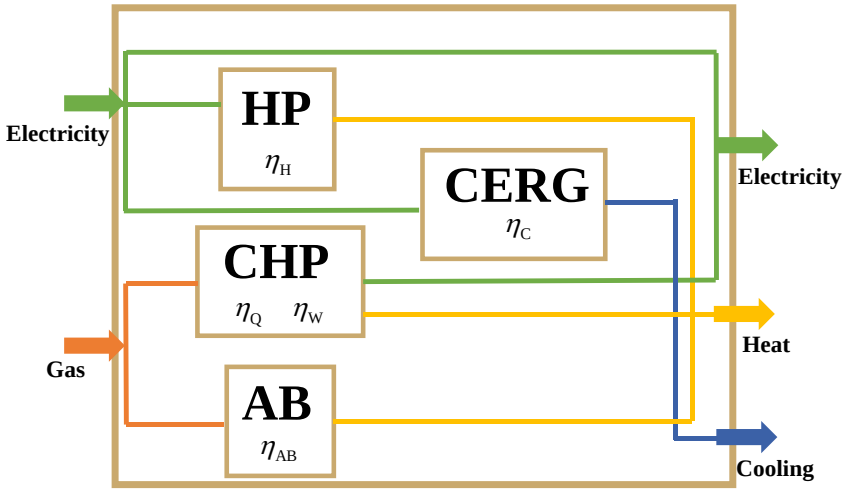

Figure 8. Optimal configuration of the EH.

Electricity is supplied by both the CHP and electricity input. The heat demand is met by the CHP, HP, and AB. The cooling demand is provided by the CERG only. Compared with the EH proposed in [35], the WARG is replaced by an HP. The overall costs of the proposed EH and the example EH used in the case study of [35] are shown in Table 3.

Table. 3. Costs of the proposed methods.

	Investment Cost (Euro)	Operating Cost (Euro)	Total Cost (Euro)
Proposed method	83490.2634	100780.8603	184271.1237
EH in Ref [35]	81860.4448	119783.7426	201644.1874

Compared with the EH proposed in [35], by introducing an HP, the investment cost increases by 1629.819 Euro per year, while the operating cost decreases by 19,002.882 Euro. The overall cost decreases by approximately 8.62%.

6 Case Study

6.1 Basic Information and Data

The Beijing government is planning to build a subsidiary administrative center in the undeveloped district of Tongzhou in the southeast of Beijing. This district has an area of approximately 6 square kilometers, and the planned building area is 3.8 million square meters. The center will be the location of the Beijing municipal government and consist of offices, commercial buildings and residential buildings. The new multiple energy systems will be built from the very beginning to jointly meet the demands for electricity, heat, and cooling.

The demands for heat and cooling were simulated by calculating the difference between indoor and outdoor temperatures. The National Ministry of Housing of China requires that the

indoor temperature cannot be less than 18° C during the heating season. Thus, the heat and cooling demands are mainly influenced by the outdoor ambient temperature. The hourly ambient temperature is averaged for the entire Tongzhou area using the temperature at the 2 m level derived from GEOS-5 for each grid cell, weighted by the building area [30]. The hourly ambient temperature of the planning year can be represented by the temperature in 2016. Thus, the weighted hourly ambient temperature of the subsidiary administrative center can be obtained, and the demand for heat and cooling can be calculated accordingly. The demand for electricity is estimated according to the forecasted maximum load (167.6 MW). The demands for electricity, heat, and cooling are shown in Fig. 8.

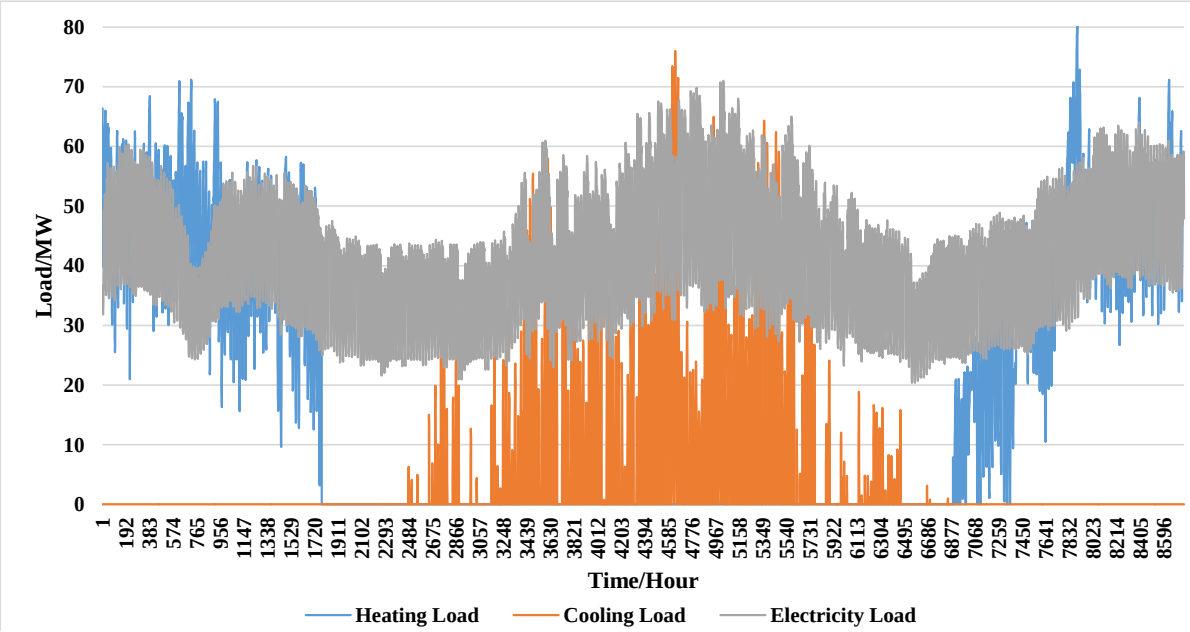

Figure 8. Simulated demands for electricity, heat, and cooling.

Based on the simulated hourly demands for electricity, heat, and cooling, the k-means based clustering method is applied to the four seasons to obtain the typical demand scenarios, which are shown in Fig. 10.

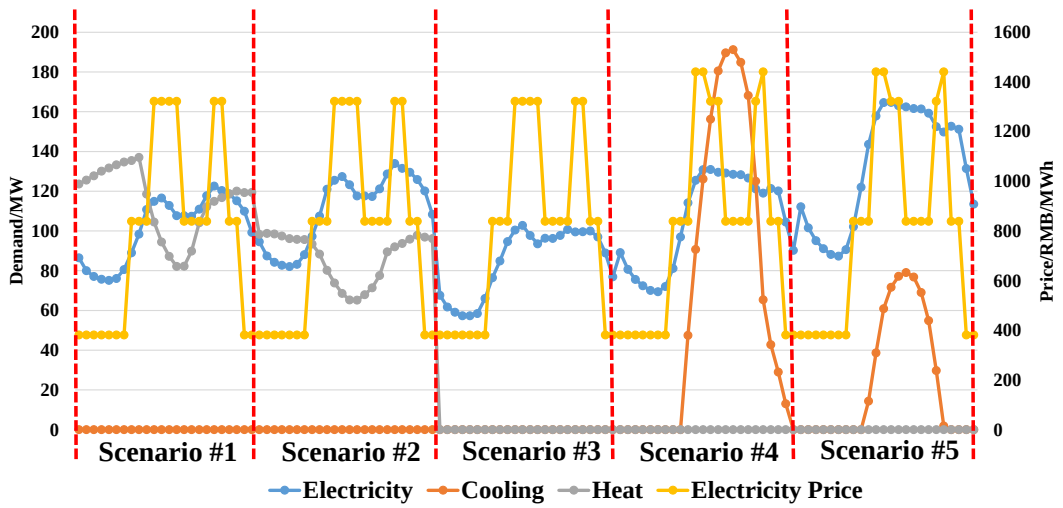

Figure 10. Simulated demands for electricity, heat, and cooling.

In the five typical scenarios, scenarios #1 and #2 correspond to the winter season, where there are electricity and heat demands but no cooling demand; scenario #3 corresponds to fall or spring, where there is only electricity demand. Scenarios #4 and #5 correspond to the summer season, where there are electricity and cooling demands but no heat demand. The weight of scenario #3 is set to be twice the weights of scenarios #1, #2, #4, and #5 because of the actual situation in Beijing. The price in Beijing is time-based and can be divided into peak, flat and valley time periods (1322.2 RMB/MWh, 839.5 RMB/MWh, and 381.8 RMB/MWh, respectively). In summer, the critical peak price (1440.9 RMB/MWh) is applied for three hours each day during 11:00~13:00 and 20:00~21:00, where RMB is the official currency of China.

The characteristics of the energy converters and storage devices to be selected are given in Table 4.

Table. 4. Parameters and costs of the energy converters to be selected.

No.	Type	Efficiency	Capacity (MW)	Cost (Million RMB)	Total Number
1~6	CHP	0.3(Electricity), 0.45(Heat)	30(Electricity), 45(Heat)	43.57	6
7~12	AB	0.8	20	1.70	6
13~18	CERG	3	40	4.80	6
19~24	WARG	0.7	20	2.40	6
25~30	HP	2	40	4.80	6
31~36	EB	0.9	20	2.40	6
37~39	TS	0.9	20	0.90	3

6.2 Results

Of the 39 total energy converters or storage devices, 3 CHP, 3 CERG, 4 WARG, 3 HP, and 2 TS have been selected based on the optimization result. Their connections are shown in Fig. 11.

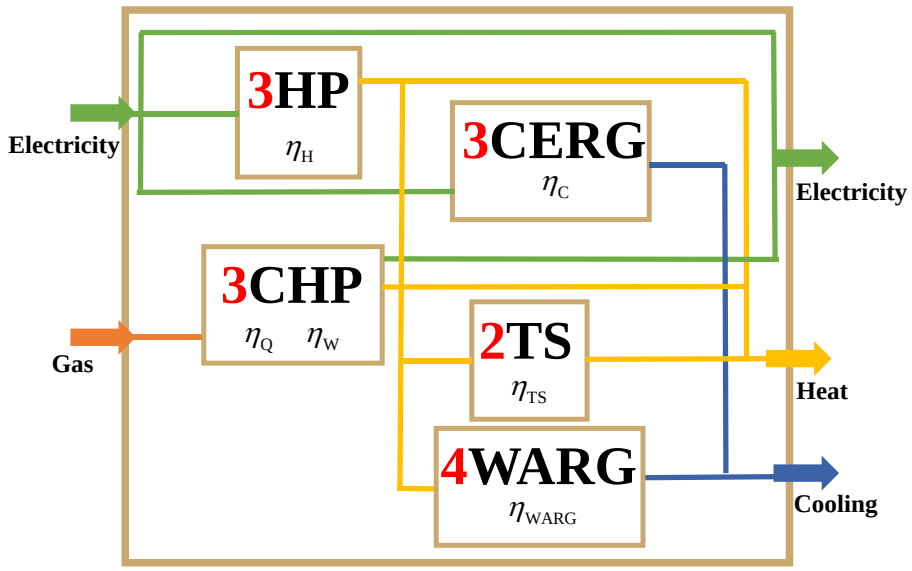

Figure 11. Optimal configuration of the EH for the subsidiary administrative center.

To illustrate the profit generated by the converters and storage devices, nine cases are illustrated, and their corresponding costs are calculated.

Case #1: The setting is the same as that in Table 4.

Case #2: The number of TS (Thermal Storage) to be selected is 2 instead of 3.

Case #3: The number of TS (Thermal Storage) to be selected is 1 instead of 3.

Case #4: The number of CHP to be selected is 2 instead of 6.

Case #5: The number of CHP to be selected is 1 instead of 6.

Case #6: The number of CHP to be selected is 0 instead of 6.

Case #7: The number of CERG to be selected is 2 instead of 6.

Case #8: The number of WARG to be selected is 2 instead of 6.

Case #9: The number of HP to be selected is 2 instead of 6.

Table. 5. Costs of the different cases.

Case	**Investment Cost (Million RMB)**	**Operating Cost (Million RMB)**	**Total Cost (Million RMB)**
#1	226.9	642.6	**869.5**
#2	232.2	637.7	869.9
#3	231.0	639.4	970.4
#4	180.7	713.6	894.3
#5	123.9	836.5	960.4
#6		Infeasible problem	
#7		Infeasible problem	
#8	230.9	652.4	883.4
#9	226.9	642.7	869.6

As shown in Table 5, the annual operating cost of the original setting is 226.9 million RMB, and the annual investment cost is 642.6 million RMB. The total cost is 869.5 million RMB. Comparison between cases #2 and #3 shows that the introduction of TS can reduce the total cost slightly. Comparison among cases #4, #5 and #6 shows that the investments in CHP can reduce the total cost, where the decrease in operating cost is larger than the increase in investment cost. The optimal number of CHPs is three. Installing more CHPs increases the total cost. There is no feasible solution if there is no CHP. Case #7 shows that it is necessary to invest in enough CERGs to meet the cooling demand together with WARGs. Comparison between cases #8 and #9 shows that investments in WARG and HP also reduce the total cost.

A CCHP is a simple and typical MES for the supply of electricity, heat, and cooling. A CCHP system consisting of a CHP and a WARG is thus used as a benchmark. The investment cost, operating cost, and total cost are 624.6 million RMB, 832.5 million RMB, and 1457.1 million RMB. Compared with the optimal case (Case #1), the total cost is thus reduced by about 59.7%.

7 Conclusions and Future Works

This paper originally proposes a graph theory based optimal configuration planning model

for EH starting from scratch. Then, a novel branch energy flows based modeling method is proposed to flexibly formulate characteristics and connection relationships of energy converters and storages. The selection of energy converters and storage devices and their connections are formulated using binary variables. By introducing big M into the optimization model, the problem is transformed into an MILP problem. A simple illustrative example and a real case study demonstrate that the proposed method can optimize simultaneously the selection of energy converters, of storage devices and of their connections.

Future works on planning of EHs should include two aspects: first extending the model from a single EH to multiple EHs connected by energy distribution networks, such as heat pipes and transmission lines; second, integrating more specific constraints of energy converters and stochastic renewable energy into the proposed model.

References

[1] Mancarella P. MES (multi-energy systems): An overview of concepts and evaluation models[J]. Energy, 2014, 65(2):1–17.

[2] Qadrdan M, Cheng M, Wu J, et al. Benefits of demand-side response in combined gas and electricity networks[J]. Applied Energy, 2016.

[3] Cui H, Li F, Hu Q, et al. Day-ahead coordinated operation of utility-scale electricity and natural gas networks considering demand response based virtual power plants[J]. Applied Energy, 2016, 176(176):183-195.

[4] Liu X, Jenkins N, Wu J, et al. Combined Analysis of Electricity and Heat Networks [J]. Applied Energy, 2015, 162:1238-1250.

[5] Holjevac N, Capuder T, Kuzle I. Adaptive control for evaluation of flexibility benefits in microgrid systems[J]. Energy, 2015, 92(4):487-504.

[6] Bai L, Li F, Cui H, et al. Interval optimization based operating strategy for gas-electricity integrated energy systems considering demand response and wind uncertainty[J]. Applied Energy, 2016, 167:270-279.

[7] Wang W, Wang D, Jia H, et al. Review of Steady-state Analysis of Typical Regional Integrated Energy System Under the Background of Energy Internet[J]. Proceedings of the CSEE, 2016, 36(12):3292–3305.(In Chinese)

[8] Chaudry M, Jenkins N, Qadrdan M, et al. Combined gas and electricity network expansion planning[J]. Applied Energy, 2014, 113(6):1171-1187.

[9] Pan Z, Guo Q, Sun H. Feasible region method based integrated heat and electricity dispatch considering building thermal inertia[J]. Applied Energy, 2016.

[10] Wei Z, Chen S, Sun G, et al. Probabilistic available transfer capability calculation considering static security constraints and uncertainties of electricity–gas integrated energy systems[J]. Applied Energy, 2016, 167:305-316.

[11] Quelhas A, Mccalley J D. A Multiperiod Generalized Network Flow Model of the U.S. Integrated Energy System: Part I—Model Description[J]. IEEE Transactions on Power Systems, 2007, 22(2):829-836.

[12] Geidl M．Integrated modeling and optimization of multicarrier energy systems[D]．Zürich：ETH，2007．

[13] Meibom P, Hilger K B, Madsen H, et al. Energy Comes Together in Denmark: The Key to a Future Fossil-Free Danish Power System[J]. IEEE Power & Energy Magazine, 2013, 11(5):46-55.

[14] Guidelines on the development of “Internet+” Smart Energy (Energy Internet) [EB/OL]. http://www.sdpc.gov.cn/zcfb/zcfbtz/201602/t20160229_790900.html (in Chinese).

[15] Krause T, Andersson G, Frohlich K, et al. A general model for energy hub economic dispatch[J]. Applied Energy, 2017, 190:1090-1111.

[16] Wang Y, Zhang N, Kang C. Review and Prospect of Optimal Planning and Operation of Energy Hub in Energy Internet[J]. Proceedings of the CSEE, 2015, 35(22):5669–5681.(In Chinese)

[17] Rastegar M, Fotuhi-Firuzabad M, Lehtonen M. Home load management in a residential energy hub[J]. Electric Power Systems Research, 2015, 119(119):322-328.

[18] Bahrami S, Safe F. A Financial Approach to Evaluate an Optimized Combined Cooling, Heat and Power System[J]. Energy & Power Engineering, 2013, 05(5):352-362.

[19] Xu X, Jin X, Jia H, et al. Hierarchical management for integrated community energy systems[J]. Applied Energy, 2015, 160:231-243.

[20] Pazouki S, Haghifam M R, Olamaei J. Short term scheduling of multi carrier systems through interruptible load and Energy Storage toward future sustainable energy needs[C]// International Conference on Electrical and Electronics Engineering. IEEE, 2013:77-81.

[21] Kienzle F, Ahcin P, Andersson G. Valuing Investments in Multi-Energy Conversion, Storage, and Demand-Side Management Systems Under Uncertainty[J]. IEEE Transactions on Sustainable Energy, 2011, 2(2):194-202.

[22] Geidl M, Andersson G. Optimal Coupling of Energy Infrastructures[C]// Power Tech, 2007 IEEE Lausanne. 2007:1398-1403.

[23] Geidl M, Andersson G. Operational and topological optimization of multi-carrier energy systems[J]. European Transactions on Electrical Power, 2006, 16(5):463-477.

[24] Shahmohammadi A, Moradi-Dalvand M, Ghasemi H, et al. Optimal design of multicarrier energy systems considering reliability constraints[J]. IEEE Transactions on Power Delivery, 2015, 30(2): 878-886.

[25] Sheikhi A, Rayati M, Ranjbar A M. Energy Hub optimal sizing in the smart grid; machine learning approach[C]//Innovative Smart Grid Technologies Conference (ISGT), 2015 IEEE Power & Energy Society. IEEE, 2015: 1-5.

[26] Bahrami S, Safe F. A financial approach to evaluate an optimized combined cooling, heat and power system[J]. Energy and Power Engineering, 2013, 5(05): 352.

[27] Sheikhi A, Ranjbar A M, Safe F. A novel method to determine the best size of CHP for an energy hub system[C]//Electric Power and Energy Conversion Systems (EPECS), 2011 2nd International Conference on. IEEE, 2011: 1-7.

[28] Ren H, Gao W, Ruan Y. Optimal sizing for residential CHP system[J]. Applied Thermal Engineering, 2008, 28(5): 514-523.

[29] Pazouki S, Mohsenzadeh A, Ardalan S, et al. Optimal place, size, and operation of combined heat and power in multi carrier energy networks considering network reliability, power loss, and voltage profile[J]. IET Generation, Transmission & Distribution, 2016, 10(7): 1615-1621.

[30] Salimi M, Ghasemi H, Adelpour M, et al. Optimal planning of energy hubs in interconnected

energy systems: a case study for natural gas and electricity[J]. IET Generation, Transmission & Distribution, 2015, 9(8): 695-707.

[31] Zhang X, Shahidehpour M, Alabdulwahab A, et al. Optimal expansion planning of energy hub with multiple energy infrastructures[J]. IEEE Transactions on Smart Grid, 2015, 6(5): 2302-2311.

[32] Qiu J, Yang H, Dong Z Y, et al. A Linear Programming Approach to Expansion Co-Planning in Gas and Electricity Markets[J]. IEEE Transactions on Power Systems, 2016, 31(5): 3594 - 3606.

[33] Geidl M, Koeppel G, Favre-Perrod P, et al. Energy hubs for the future[J]. IEEE Power & Energy Magazine, 2007, 5(1):24-30.

[34] Lofberg J. YALMIP : a toolbox for modeling and optimization in MATLAB[C]// Cacsd Conference. 2004:287-92.

[35] Chicco G, Mancarella P. Matrix modelling of small-scale trigeneration systems and application to operational optimization[J]. Energy, 2009, 34(3):261-273.

Acknowledgements

This work was supported by the National Science Foundation of China (No. 51620105007, 51677096).