ARTICLE IN PRESS

ISA Transactions xxx (xxxx) xxx

Contents lists available at ScienceDirect

ISA Transactions

journal homepage: www.elsevier.com/locate/isatrans

Practice article

Energy saving and Fuzzy-PID position control of electro-hydraulic system by leakage compensation through proportional flow control valve

Gyan Wrat [a], Mohit Bhola [a], Prabhat Ranjan [a,*], Santosh Kr Mishra [b], J. Das [a]

[a] Indian Institute of Technology (Indian School of Mines), Dhanbad, 826004, India
[b] Lovely Professional University, Phagwara, 144411, India

ARTICLE INFO

Article history:
Received 6 February 2019
Received in revised form 12 November 2019
Accepted 3 January 2020
Available online xxxx

Keywords:
Energy efficiency
Fuzzy PID
Position control
Flow rate
Simulation
Actuator

ABSTRACT

In this article, the focus is on the energy efficiency along with the position control of the linear actuator used in heavy earth moving equipment. It is quite evident that linear actuators are one of the critical machinery components used in the construction and mining activities like in booms of excavation equipment. The proposed work employed two different hydraulic circuits and a contrast has been carried out in terms of the energy efficiency. In one hydraulic circuit, the conventional proportional directional control valve (PDCV) is used for the position control. In another one, an innovative solution of using proportional flow control valve (PFCV) by creating artificial leakage between the two ends of the actuator is evaluated according to its energy efficiency. The extra flow coming from the pump during position control is by-passed by PFCV rather than the pressure relief valve in PDCV. This reduces the energy loss in the form of heat and increases the efficiency of the hydraulic circuit. The simulation of the hydraulic circuit is performed using MATLAB/Simulink and results are compared with the experiments and it is found that hydraulic circuit using PFCV is 8.5% more energy efficient than the conventional circuit using PDCV. The position control of the actuator is done using PID controller tuned by the fuzzy controller.

1. Introduction

Hydraulic systems generating large power are extensively used in construction and mining industries. Generally, due to the constant hydraulic power supply, a conventional hydraulic system possesses low efficiency where as variable power is needed at the actuator end. Additionally, some losses caused by throttling, overflowing etc further result in hydraulic system's low efficiency. The hydraulic systems used in mining and construction field such as loaders, shovels, excavators, dozers etc [1–5] have low efficiencies. Therefore, energy saving and emission reducing designs are most researchable topics for the hydraulic systems used in mining or construction machinery [6–8]. To develop the energy efficient position control of the linear actuators which are used in almost every construction equipment is the need of the hour. This article mainly focuses on the energy efficient position control strategy with an innovative circuit using traditional hydraulic components. Many researchers have contributed in this area of energy efficient hydraulic circuit used in the heavy earth moving equipment. The recent literatures in this area have been discussed in subsequent paragraphs.

Tianliang et al. [9] proposed a new type of proportional relief valve (PRV) along with a hydraulic energy regeneration unit (HERU) connected to its outlet to overcome the traditional relief valve overflowing energy loss. The experimental results are validated through simulation and it showed that the proposed system is stable and has better performance as compared to traditional PRV. This leads to reduction in motor output power and the proposed PRV thus saves more energy. This projected method involves the use of the hydraulic accumulator for hydraulic energy regeneration. The accumulator pre-charge pressure has major influence on the energy efficiency. So, this makes the system complex in term of obtaining optimal pre-charge pressure for each condition. This problem to some extent is addressed by Ali et al. [10] to control both the actuator position and supply pressure at a time and to reduce the overall energy consumption of the electro-hydraulic servo system (EHSS). The PRV pressure setting is changed according to the position of the spool of the proportion directional valve. This results in a multi input single output (MISO) system. The simulation and test results obtained using proposed controller depicts the overall power consumption of EHSS is reduced in optimal way. The above authors dealt with energy saving of the electro-hydraulic system using fixed displacement pumps. Some researchers have worked in the energy saving of the EHSS using load sensing pump. The research

* Corresponding author.
E-mail address: prabhatmech14@gmail.com (P. Ranjan).

https://doi.org/10.1016/j.isatra.2020.01.003
0019-0578/

Please cite this article as: G. Wrat, M. Bhola, P. Ranjan et al., Energy saving and Fuzzy-PID position control of electro-hydraulic system by leakage compensation through proportional flow control valve. ISA Transactions (2020), https://doi.org/10.1016/j.isatra.2020.01.003.

carried out by Chiang and Chien [11] simultaneously controls both high velocity and input power using self-organizing fuzzy sliding mode control (SOFSMC). The energy saving performance of three different systems have been compared and it has been found that load sensing system saves about 61.2% energy and constant supply pressure system saves 12.6% energy as compared to the conventional system. The above control algorithm is very complex in terms of its applicability. To overcome this issue, Wang and Wang [12] worked on to minimize the overflow and excess pressure losses across the proportional directional valve (PDV) of the EHSS using variable supply pressure (VSP) control having load sensing pump as main energy source. The simulation and experimental results show 62.5% and 90% energy saving for two different position tracking demand as compared to the fixed displacement pump. Similarly, an energy saving position control strategy has been put forth by Baghestan et al. [13] for EHSS employing two different control laws for proportional directional valve and pressure relief valve. The testing of the proposed method is performed on an electro-hydraulic servo system and shows considerable amount of saved energy.

The effects of two different control strategies during position control of actuator using electric motor speed and swash plate angle control of main pump has been studied by Wrat et al. [14]. The simulation and test results of the swash plate control strategy displayed better response and dynamic characteristics than its counterparts. The energy saving aspect is not covered in this article. Xu and Cheng [15] surveyed the multi-actuator hydraulic systems for energy-saving technologies impact and control solution; and found that the advance coordinated position control (CPC) or coordinated rate control (CRC) are capable of achieving comfort, safety, precision and effective operation. In mobile hydraulics, the motion control is employed to achieve low environmental impact, high energy efficiency, effective operation and good dynamic performance.

Some of researchers used meter-in and meter-out flow control methods for energy saving in the hydraulic system. DeBoer and Yao [16] studied the velocity control, utilizing programmable valve with a cylinder pressure feedback of the single-rod double actuating hydraulic boom cylinder. Decoupling the control of meter-in and meter-out flows, due to programmable valve controls the boom cylinder motion while decreasing the pump energy requirement using kinetic and potential energy of the load. The experimental result obtained shows the proposed pressure feedback controller improves the velocity tracking performance and also a significant amount of energy being saved. But with the usage of five programmable valves, the control of the valves for efficient operation of the system makes it difficult for different operating conditions. In another work, an advanced energy management algorithm proposed by Ding et al. [17] utilized combined pressure/flow hybrid pump control with meter-out (MO) valve control. The proposed strategy applied to the hydraulic mechanical coupling model as continuous digging and dumping actions of 2 ton mini excavator achieved the energy saving rate upto 28% as compared to load sensing system.

There has been research carried out on the system involving counter-balance valves with time-varying negative loads in which a variable meter-out flow control valve has been adopted, and a stable controller has been proposed by Mengren and Wang [18]. The controller adjusts the pump displacement according to the load condition and the velocity of the actuator. This reduces the inlet pressure to the actuator resulting in the less power consumption. This is suitable for the applications such as excavator boom in which the load and the flow requirements vary dynamically during operation.

Some researchers have also worked on the energy saving technique using different hybrid hydraulic transmissions along with some regeneration devices like generator, accumulator and the flywheel. The work done by Bhola et al. [19] contributed towards the development of the hybrid hydraulic transmission for traction of the front-end loader (FEL) using electric generator and the battery bank. The stored energy in the batteries during less load operation of the hydrostatic drive is used for the lifting and tilting operations of the FEL by the linear actuators. An innovative hydrostatic energy efficient system has been projected by Triet and Ahn [20] using flywheel as an energy capturing device. The experimental results show that the proposed system uses about 52% of energy supplied from primary power source in contrast to traditional hydrostatic drives. These applications are used only for mobile machinery involving hydraulic system. For stationary systems like cranes, significant contributions has been done by Wang and Wang [21] in which they designed the energy efficient system consisting of pressure compensated hydraulic circuit along with the electrical regeneration device. The compensator designed as an energy regenerator device for the system consists of a hydraulic motor and an electric generator. The proposed strategy is validated with experimental and simulation results and the observation showed a significant amount of energy being saved. The energy saving technique developed by Bing et al. [22] proposed a hydraulic system based on Variable Voltage Variable Frequency (VVVF) controller to improve the energy utilization efficiency of hydraulic elevators. The accumulator pressure of hydraulic system is utilized as energy storage and release unit, which reduces the required installed energy and also energy consumption.

Other novel energy saving approaches have been investigated and are discussed. A novel electro-hydraulic energy saving system has been proposed by Jun et al. [23] to integrate recovery and regeneration devices. For real-time control, a parametric rule-based strategy has been developed for the proposed system. The proposed prototype energy saving system is equipped on the 23 ton hydraulic excavator to perform experiments and has been observed that 17.6% energy is saved by the system as compared to conventional system. Chu-Ming et al. [24] proposed new hydraulic hybrid luffing system (NHLS) for hydraulic cylinder control based on common pressure rail (CPR) to increase the efficiency of the valve-controlled hydraulic luffing system (VHLS). The experimental results highlighted a significant increase in energy reduction. Ding et al. [25] developed a leaking valve-pump parallel control (LVPC) system to improve the response of variable speed pump control (VSPC) system, by connecting a leaking control valve parallel to variable speed pump to regulate system flow collectively. It has been observed that LVPC has higher open loop gain as compared to the VSPC which makes it suitable for fast response applications.

The control objectives in this paper are twofold: energy-saving and position tracking. Some researchers have already worked on fuzzy-PID controller [26–30] for the better dynamic response of the system. This is done by gain scheduling of the PID parameters to overcome the system nonlinearities. In this article, Fuzzy-PID controller is also used in both the system using PFCV and PDCV and compared with the conventional PID controller. This is done to minimize the system nonlinearities associated with the valves having orifice as a control element. The experimental results show the better control performance as compared to that of conventional controller.

From the above literatures, it has been observed that the energy saving approach using the concept of flow control valve between the cylinder inlet and outlet has not been addressed till date. In this article, the comparison in terms of the energy saving between the two-position control strategy using proportional directional control valve (PDCV) and flow control valve(FCV) by creating artificial leakage between the two ends of the cylinder

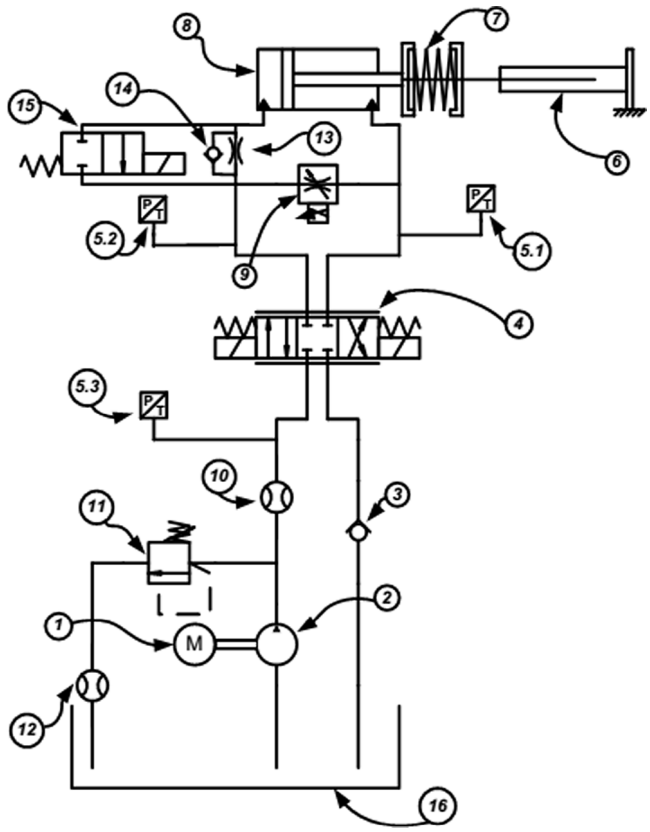

Fig. 1. Hydraulic circuit diagram for the test set-up.

has been carried out. It has been found that the flow control valve shorted between the cylinder ends is 8.5% more efficient as compared to the position control through PDCV. The stability analysis in terms of the oscillation in the actuator will be the future scope of this work.

The rest of this article is organized as follows. Sections 2 and 3 comprise the detailed description of hydraulic system and the governing equations used in hydraulic circuit. Section 4 demonstrates the experimental description using LabVIEW and NI-cRIO. The assumptions for system simulation modeling and structure of fuzzy-PID are reported in Sections 5 and 6 respectively. Section 7 concentrates on important results obtained considering two noble cases. Finally, conclusions are furnished in Section 8.

2. System description

Fig. 1 shows the circuit diagram for the test set-up used for the analysis. The test set-up consists of the main pump (2) driven by the induction motor (1). The flow-meter (10) measures the flow-rate going to the main cylinder (8). The 4/3 PDCV (4) is used for controlling the flow during position control of the cylinder, while keeping the FCV (9) in off condition and the on/off DCV (15) in on condition in the first mode. During the second mode, the PDCV (4) is opened fully and flow through the cylinder is controlled by the FCV (14) to control its position. In this mode, the on/off DCV (15) is in off condition and flow passes through the throttle valve during retraction of the cylinder for the creation of the back pressure. The back pressure is necessary to control the speed of the actuator as it is retracted by the spring action. Pressure transducers (5.1) and (5.2) are used for taking pressure readings at the rod and bore end sides and the main pump outlet pressure, respectively. The main pressure relief valve (PRV) (11) is employed for bypassing the extra flow through it during the position control. The list of major components and the parameters used in simulation are shown in Tables 1 and 3 respectively.

3. Mathematical modeling

The mathematical models of the two hydraulic systems are explained below from Eqs. (1) to (11). The system equations are written below based on the MATLAB/Simulink models reflecting the two configurations of hydraulic circuits in consideration i.e. one using PDCV and the other using FCV. The system equations of hydraulic system using PDCV are expressed firstly.

3.1. Proportional Direction Control Valve (PDCV)

$$Q_1 = Av + \frac{P_1 - P_2}{R_{lkga}} + \frac{V}{\beta}\frac{dP_1}{dt} \tag{1}$$

Eq. (1) represents the flow flowing in the actuator and is equal to the flow responsible for the actuator movement, leakage through the cylinder clearances and compressible flow in the cylinder chamber.

$$Av + \frac{P_1 - P_2}{R_{lkga}} - \frac{V}{\beta}\frac{dP_2}{dt} = Q_2 \tag{2}$$

Eq. (2) represents the flow coming out form the cylinder is balanced by the flow due to the actuator motion and its leakage by subtracting the compressible fluid in the cylinder.

$$P_L = P_1 - P_2 \tag{3}$$

Eq. (3) represents the load pressure of actuator; the difference of inlet pressure and outlet pressure of the actuator of the system.

$$Q_L = \frac{Q_1 + Q_2}{2} \tag{4}$$

Eq. (4) represents the load flow inside of the actuator; where Q_1 and Q_2 are the inlet flow and the outlet flow of the actuator respectively.

$$Q_L = Av + \frac{P_L}{R_{lkga}} + \frac{V}{2\beta}\frac{dP_L}{dt} \tag{5}$$

Eq. (5) represents the load flow equation inside the actuator and obtained using above all four equations.

$$F = (P_1 - P_2)A = M\frac{dv}{dt} + \beta_v v + KX \tag{6}$$

Eq. (6) represents the pressure force balances the inertial force, viscous friction and external load on the cylinder, which is the spring force.

$$Q_L = K_q x_v - K_c P_L \tag{7}$$

Eq. (7) shows the load flow through the proportional valve which depends upon the spool position and the load pressure.

The system equations of hydraulic system using FCV are stated now and are jotted down below.

3.2. Flow control valve (FCV)

$$Q_0 = C_d A\sqrt{\frac{2P_1}{\rho}} = K_q x_v - K_L P_1 \tag{8}$$

Table 1
Major components used in hydraulic circuit.

Sl. No	Item description	Sl. No	Item description
1	Electric motor	2	Main pump
3, 13	Check valve	4.1, 4.2	4/3 directional control valve
5.1, 5.2,	Pressure transducers	6	Linear Variable Differential Transducer (LVDT)
7	Spring	8	Linear actuator
11	Pressure relief valve	9	Variable orifice
10, 12	Flow meter	14	Flow control valve
16	Tank	15	2/2 Directional control valve

Table 2
Nomenclature.

Symbol	Description	Unit
Q_1	Inlet flow to the actuator	m^3/s
A	Area of actuator	m^2
v	Velocity of actuator	m/s
P_1	Inlet pressure of the actuator	N/m^2
P_2	Outlet pressure of the actuator	N/m^2
R_{lkga}	Leakage resistance of the actuator	$N\ s/m^5$
V	Compressible fluid volume	m^3
β	Bulk modulus of oil	Pa
Q_2	Outlet flow from the actuator	m^3/s
P_L	Load pressure of the pump	N/m^2
Q_L	Load flow inside of the actuator	m^3/s
F	Hydraulic force	N
M	Inertia mass	kg
β_v	Viscous co-efficient of fluid	N s/m
F_{Load}	External load	N
Q_0	Flow through orifice	m^3/s
x_v	Spool position	M
ρ	Density of oil	kg/m^3
K	Spring constant	
K_q	Valve flow co-efficient	
K_c	Valve pressure co-efficient	
C_d	Valve discharge flow co-efficient	
PDCV	Proportional Directional Control Valve	
PFCV	Proportional Flow Control Valve	
PRV	Proportional Relief Valve	
PDV	Proportional Directional Valve	
FCV	Flow Control Valve	
FLC	Fuzzy logic controller	

Table 3
Parameter values used in simulation.

Description	Values
Pump displacement, D_p	4.45×10^{-6} m^3/rad
Pump leakage resistance, R_{lkgp}	1×10^{-13} N s/m^5
Pump speed, ω_p	157 rad/s
Bulk modulus of oil, β	$1e^9$ Pa
Fluid viscous co-efficient, β_v	2.6037×10^7 N s/m

Eq. (8) shows the flow through the flow control valve (FCV) depends upon the position of the spool and the inlet pressure of the cylinder.

$$Q_1 = Q_0 + Q_2 \tag{9}$$

Eq. (9) shows the flow by the pump and is equal to the flow through the flow control valve and the flow through the cylinder which elaborated in Eq. (10).

$$Q_1 = K_q x_c - K_c P_1 + Av + \frac{V}{\beta}\frac{dP_1}{dt} + \frac{P_1}{R_{lkga}} \tag{10}$$

The hydraulic force at the cylinder end is given by Eq. (11) for one direction.

$$P_1 A = M\frac{dv}{dt} + \beta_v v + KX \tag{11}$$

The notations used in the above equations are described in the nomenclature given in Table 2.

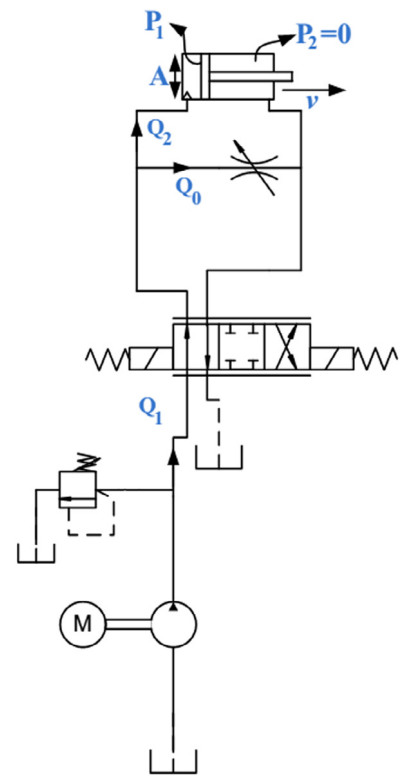

Fig. 2. Circuit diagram using PFCV during extension of an actuator.

Fig. 2 shows the circuit diagram of the hydraulic system using PFCV. Here, the PDCV is fully open and so the back pressure on the rod end side during extension and bore end side during retraction remains atmospheric. The extra flow is bypassed through the PFCV to control the position of the actuator.

The Fig. 4 shows the transfer function between input signal of the PFCV and the output of the cylinder.

Fig. 5 shows the circuit diagram of the hydraulic system using PDCV. Here, the amount of flow to the actuator is controlled by changing the area opening of PDCV and extra flow is bypassed through the pressure relief valve at its cracking pressure.

The Fig. 7 shows the transfer function between input signal of the PDCV and the output of the cylinder.

4. Experimental description

Referring to Figs. 3 & 6 the experiments are performed using the LabVIEW14 software and National Instruments controller CompactRIO (NI-cRIO). To conduct the experiments the LabVIEW14 (Graphic User Interface Software) is interfaced with the host PC using 16-bit NI-cRIO 9076 real time processor, input module NI-cRIO 9219 and output module NI-cRIO 9264. In the LabVIEW environment, Virtual Instrumentation (VI) program is made and linked to the FPGA (Field Programmable Gate Array)

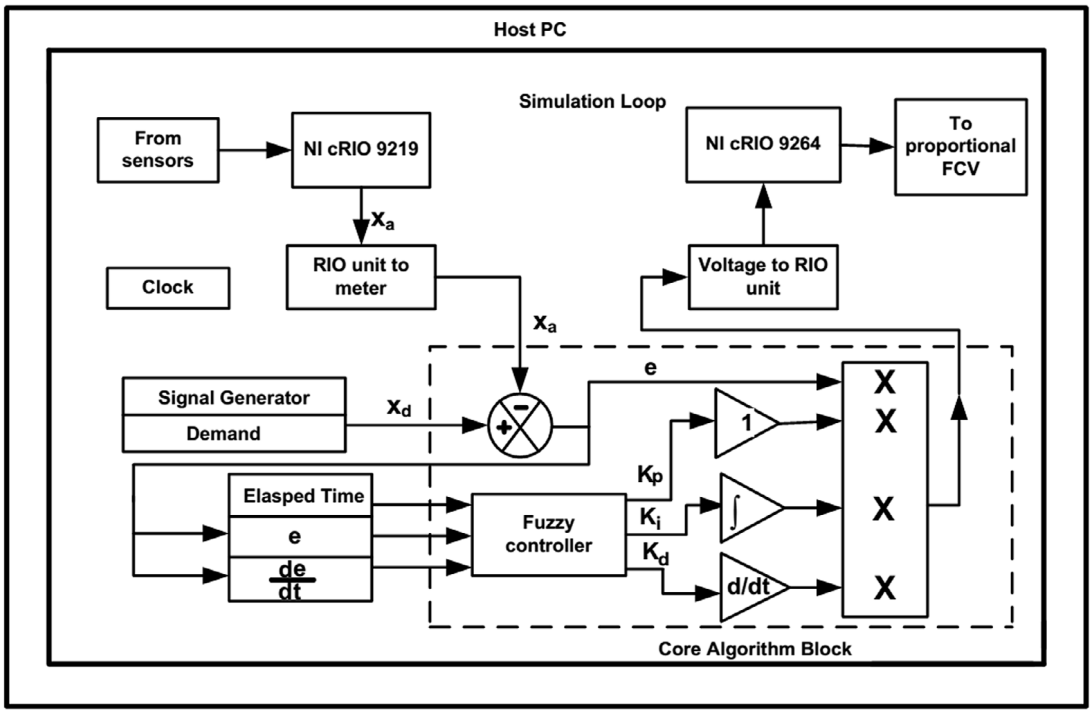

Fig. 3. Position control strategy in Lab VIEW using PFCV.

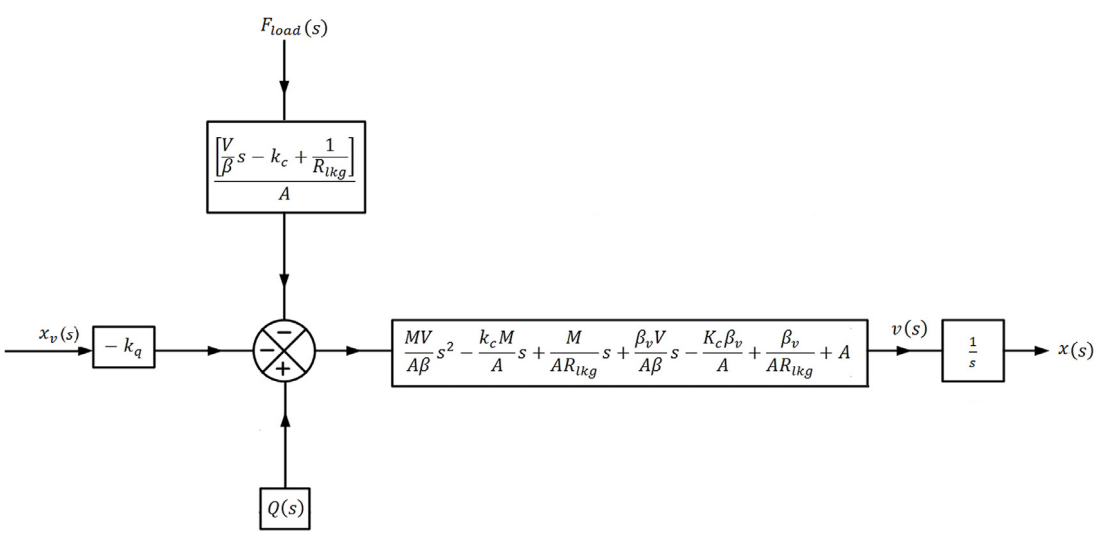

Fig. 4. Transfer function of the hydraulic circuit using PFCV.

module of the controller. The sensors provides the real time analog signal in the form of 0–10 V and output signal from ±10 V is given to the PDCV and PFCV from the analog output module for position control of the actuator and meter-out orifice for providing load to the actuator by creating back pressure during its extension and retraction (see Fig. 8).

5. System modeling

The following assumptions are taken into account during simulation of the hydraulic circuit in MATLAB/Simulink which are given below:

- The inertia of the fluid is not taken into consideration in this study.
- The effects of temperature and pressure on fluid properties like leakage resistances, compressibility is not taken into considerations.
- The opening of the valve is considered and effects of the system parameters on valve flow and pressure coefficient are ignored.
- The constant inertial force is considered in the simulation.

Fig. 9 describes the load cycle profile used for analyzing the controller action. During the forward stroke of the actuator, the load is acting in positive direction and during retraction of the cylinder; it is in negative direction. The range of variation of load for the cylinder varies from 7.6 kN to 20 kN. The load is varied by changing the area meter-out orifice during extension

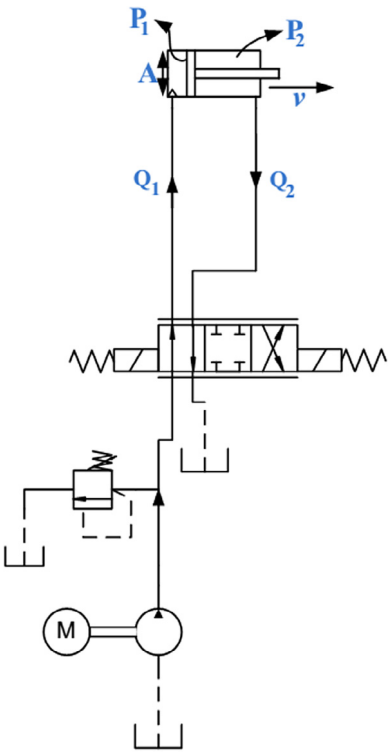

Fig. 5. Circuit diagram using PDCV during extension of an actuator.

and retraction of the cylinder. This much of load is sufficient to study the variation of load required for the control application and to demonstrate the actual set-up at the laboratory scale.

6. Fuzzy PID structures

The control signal of a linear PID at any given time instance 'n' with a sampling time 'T_s' is expressed in its absolute form as (12) or increment form as (13) [31].

$$u_{PID}(n) = K_p e(n) + K_I T_s \sum_{q=0}^{n} e(q) + \frac{K_D}{T_s} \Delta e(n) \tag{12}$$

$$\Delta u_{PID}(n) = K_p \Delta e(n) + K_I T_s e(n) + \frac{K_D}{T_s} \Delta^2 e(n) \tag{13}$$

where, $u_{PID}(n) = u_{PID}(n-1) + \Delta u_{PID}(n)$

K_P is proportional gain,

K_I is integral gain,

K_D is derivative gain.

The error state variables are defined as:

Error $e(n) = y(n) - y_d(n)$,

Error change $\Delta e(n) = e(n) - e(n-1)$,

Rate of error change $\Delta^2 e(n) = \Delta e(n) - \Delta e(n-1)$,

Sum-of-error $\sum e(n) = \sum_{q=0}^{n} e(q)$.

where, $y(n)$ is the feedback response signal, and $y_d(n)$ is the desired response or reference input at the nth sampling instant

Fig. 10 depicts the schematics of the control strategy employed for online tuning of the three control parameters K_p, K_i and K_d of the PID using fuzzy controller. The tuning parameters are based on the two inputs i.e. the error and the rate of change of the error. Based on the rules given and defined range for the inputs and three outputs, the fuzzy controller tunes the parameters online and eliminates the major non-linear effects in the system. This results in better control as compared to the conventional PID control.

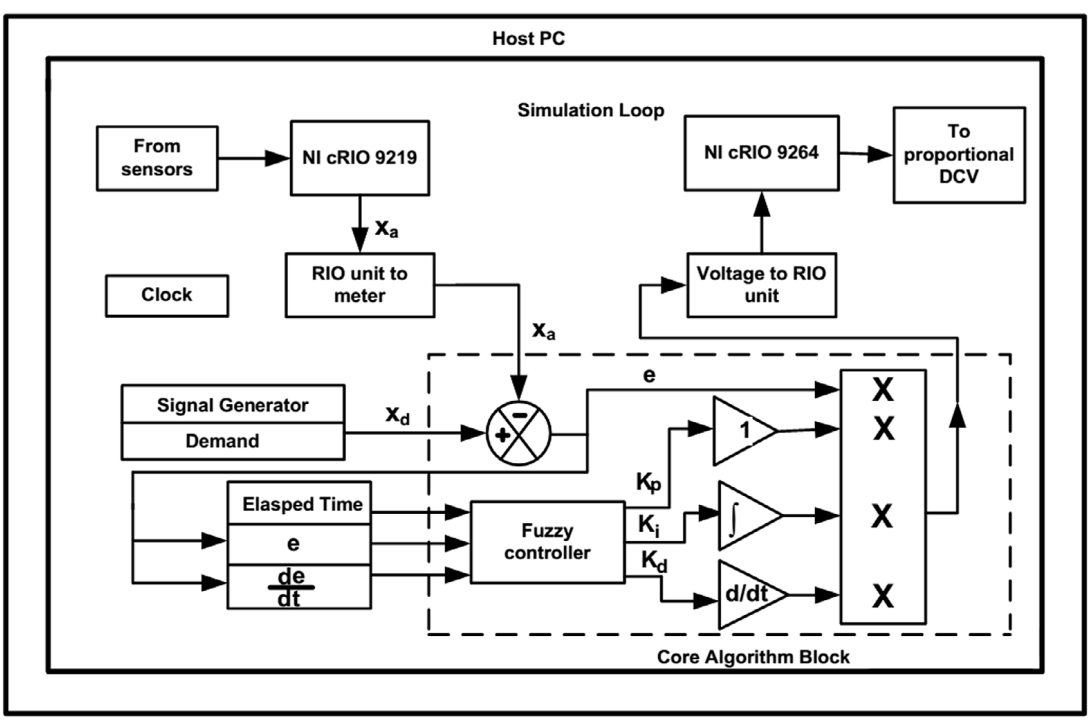

Fig. 6. Position control strategy in LabView using PDCV.

Please cite this article as: G. Wrat, M. Bhola, P. Ranjan et al., Energy saving and Fuzzy-PID position control of electro-hydraulic system by leakage compensation through proportional flow control valve. ISA Transactions (2020), https://doi.org/10.1016/j.isatra.2020.01.003.

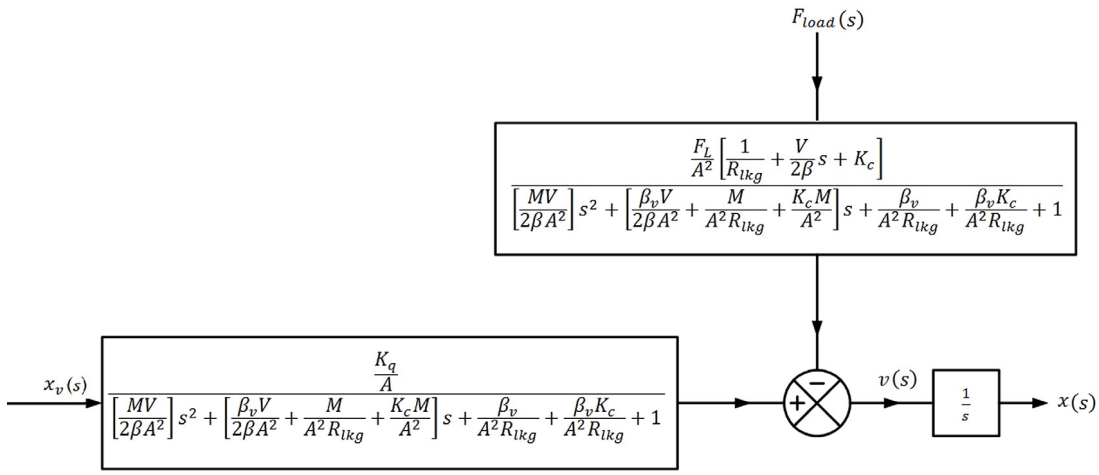

Fig. 7. Tranfer function of the hydraulic.

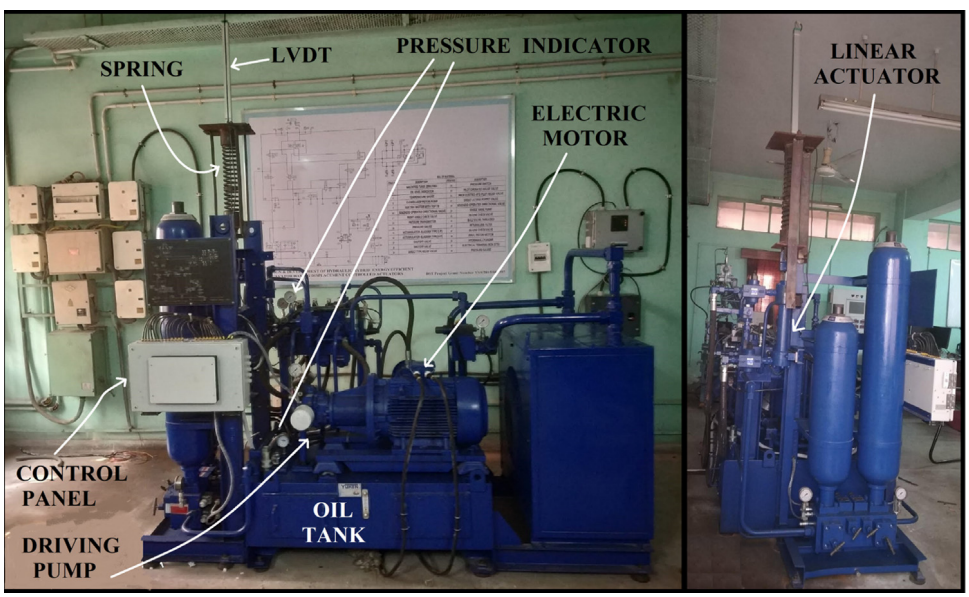

Fig. 8. Experimental Set-up.

Table 4
Rule table of the fuzzy inference system.

$K_p/K_i/K_d$		$\dot{e}$				
		NB	NS	Z	PS	PB
	NB	VB/VS/M	VB/VS/S	B/S/VS	B/M/S	M/M/M
	NS	VB/VS/M	B/S/S	B/M/S	M/M/S	S/M/M
e	Z	B/S/M	M/S/S	M/M/S	M/B/S	S/B/M
	PS	B/S/B	M/M/M	S/M/M	S/B/M	VS/VB/B
	PB	M/M/VB	S/M/B	S/B/M	VS/VB/B	VS/VB/VB

where,

e	Error	$\dot{e}$	Rate of error
NB	Negative big	VS	Very small
NS	Negative small	S	Small
Z	Zero	M	Medium
PS	Positive small	B	Big
PB	Positive big	VB	Very big

According to linguistic variables, rules which are needed to design fuzzy logic controller is shown in Table 4. It contains the parameters of the membership functions of the fuzzy-PID controller outputs. Using the rule table of fuzzy interface system, the control surface of fuzzy-PID for position control of actuator is designed for both the strategies.

7. Results and discussion

7.1. Proportional Flow control valve (FCV)

Fig. 11 shows the flow rate and pressure drop across the main pressure relief valve (PRV) (11) in the position control using PFCV (9). During 0–2 s, the proportional direction control valve (PDCV) (4) is in off condition. The hydraulic oil from the main pump is discharged through the main PRV at its set pressure of 150

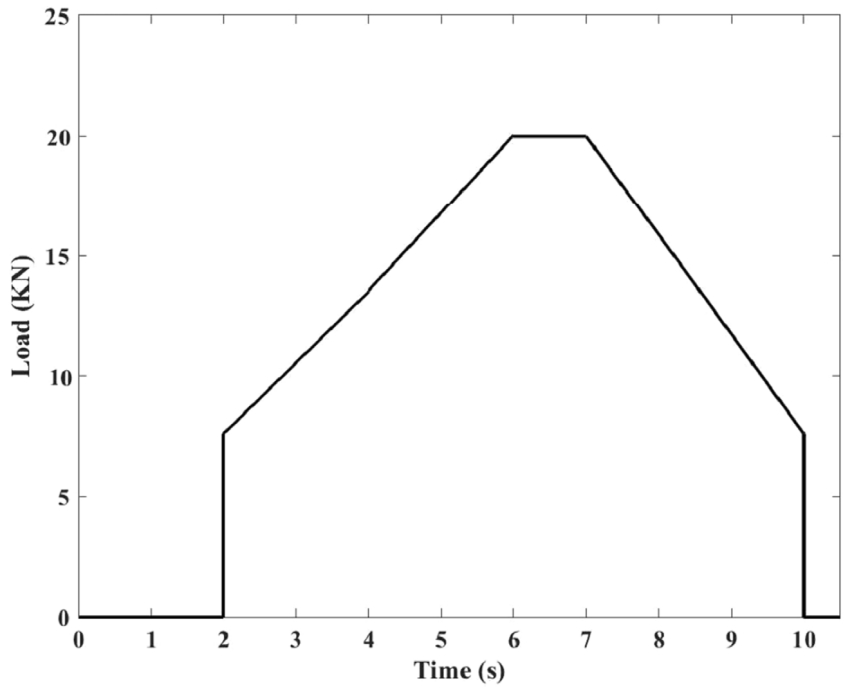

Fig. 9. Load acting on the cylinder using simulation.

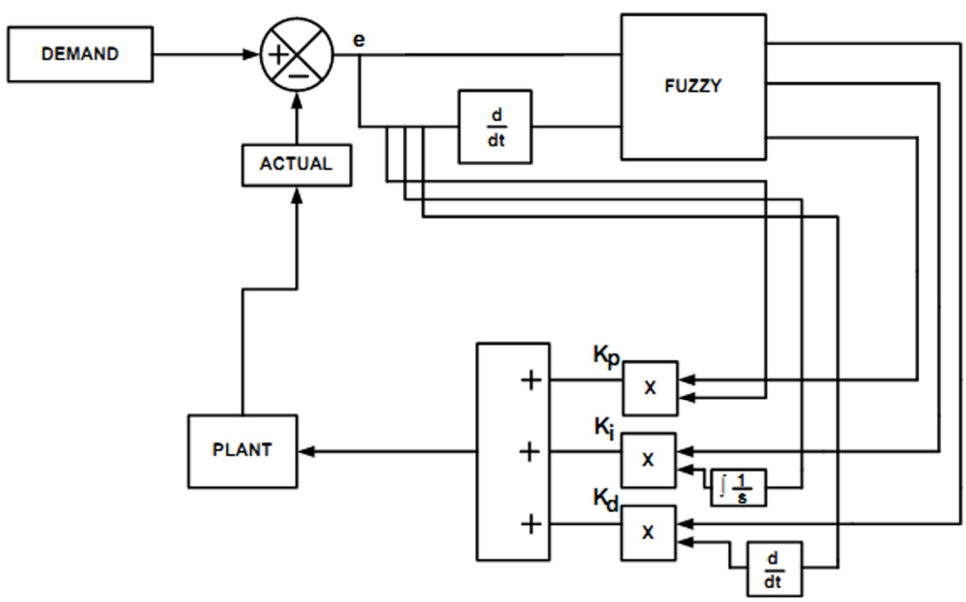

Fig. 10. Block diagram for closed loop fuzzy-PID control.

bar. After that for the duration of 2–6 s, the PDCV gets fully opened and piston of the linear actuator starts extending and its position is controlled by controlling the flow rate through the PFCV. Similarly, for the period of 6–7 s, the piston is in rest position after its extension. Hence, the flow is again discharged through the PRV at 150 bar. Same observation is noticed during return stroke of the piston in 8–10 s and some flow is discharged through the PRV at 150 bar because of the back pressure created by the throttle valve.

Fig. 12 shows the speed and the torque at the electric motor during its duty cycle of 0–11 s. The speed of the induction motor (1) is almost fixed i.e. around 1500 rpm at 50 Hz electric supply frequency. The fluctuation in the speed is due to the fluctuation in the load on the induction motor during its operation. As the load on the induction motor increases, the slip increases leading to the decrease in the speed. The torque is high during the rest position of the piston as oil from the main pump (2) is discharged through the PRV at high pressure of 150 bar. During extension and retraction strokes of the piston, the torque on the induction motor varies according to the load pressure on the cylinder.

Fig. 13 shows the position of the cylinder with respect to the given demand. It is observed that the fuzzy PID has better control performance than the simple PID controller. This results in tight accuracy of the position control of the cylinder. It is also noticed that the simulation results have close agreement with the experimental results, which shows the validation of the simulation model. The change in position error percentage of PID

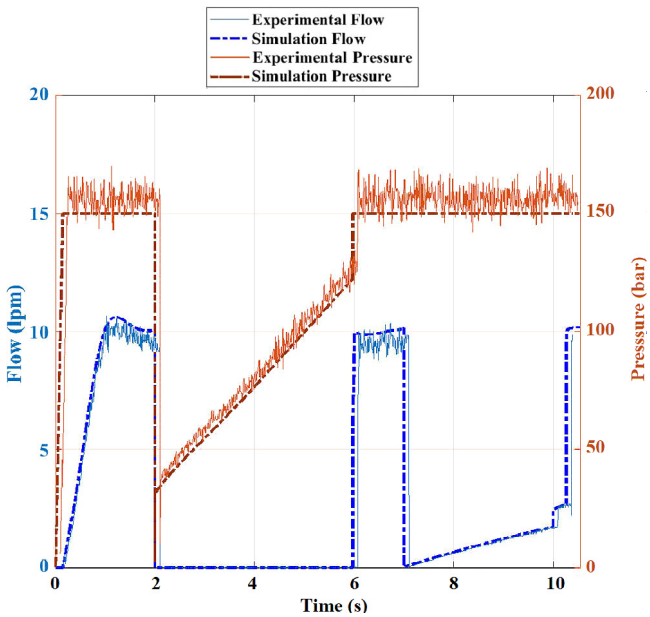

Fig. 11. Flow rate through main pressure relief valve using PFCV.

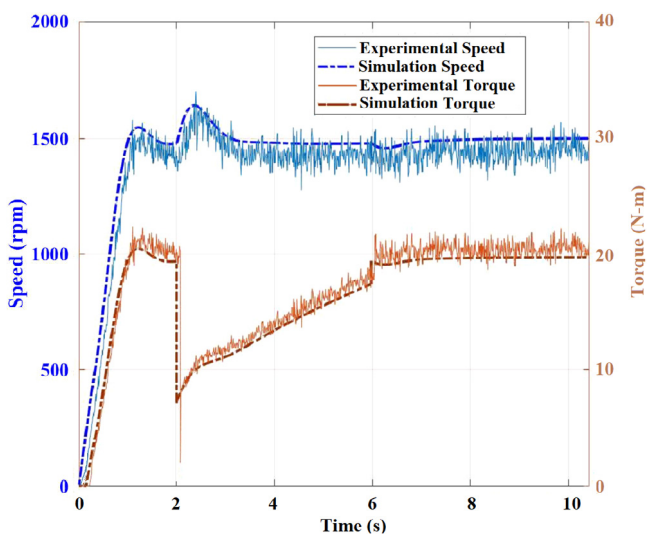

Fig. 12. Input speed and torque on the electric motor using PFCV.

Table 5
Tuning parameters of PID-fuzzy (PFCV).

Output tuning parameters	Range [min, max]	Input parameters	Range [min, max]
K_p (Proportional gain)	[−25, 0]	e (error)	[−1, 1]
		de/dt (rate of error)	[−1, 1]
K_i (Integral gain)	[0, −1]	e (error)	[−1, 1]
		de/dt (rate of error)	[−1, 1]
K_d (Derivative gain)	$[0, 10] \times 10^{-3}$	e (error)	[−1, 1]
		de/dt (rate of error)	[−1, 1]

experimental and fuzzy-PID experimental values with respect to demand positions are obtained as 13.875 and 4.685 respectively.

Fig. 14 shows the relation between inputs i.e. e and de/dt and the outputs K_p, K_i and K_d for the fuzzy controller using proportional flow valve. The fuzzy controller gives the output and changes the tuning parameters of the PID controller dynamically. This results in lesser fluctuations in output of the plant and hence

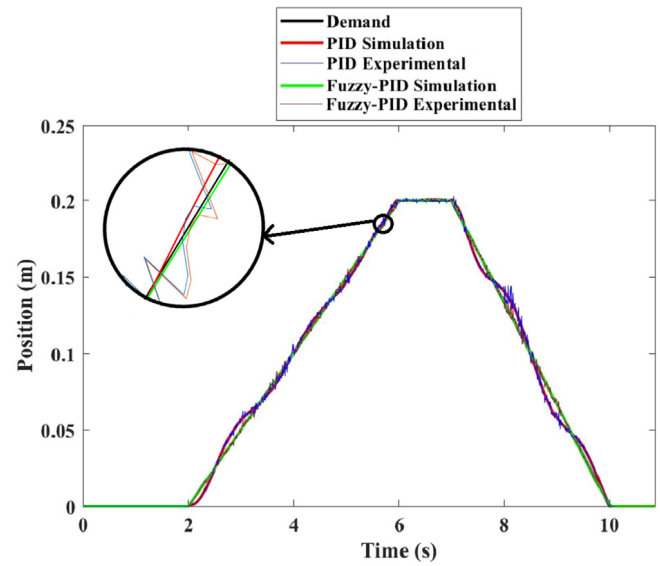

Fig. 13. Position comparison using PID and fuzzy PID control using PFCV.

Table 6
Tuning parameters of PID-fuzzy (PDCV).

Output tuning parameters	Range [min, max]	Input parameters	Range [min, max]
K_p (Proportional gain)	[10, 20]	e (error)	[−1, 1]
		de/dt (rate of error)	[−0.5, 0.5]
K_i (Integral gain)	$[0, 5] \times 10^{-3}$	e (error)	[−1, 1]
		de/dt (rate of error)	[−0.5, 0.5]
K_d (Derivative gain)	[0.05, 0.1]	e (error)	[−1, 1]
		de/dt (rate of error)	[−0.5, 0.5]

better control. The range of the tuning parameters are shown in Table 5.

7.2. Proportional Direction Control Valve (PDCV)

Fig. 15 displays the flow through the PRV (11) during position control of cylinder using proportional direction control valve (4). During 0–2 s, the cylinder is in rest position and pressure measured by the pressure sensor (5.3) is the cracking pressure of the PRV (150 bar) (11) and flow is measured by the flow sensor (12). The flow and pressure are fluctuating during cylinder movement in forward and return strokes respectively.

Fig. 16 shows the speed and the torque at the electric motor shaft. The speed of the electric motor is around 1500 rpm at 50 Hz power supply. The torque at the motor shaft is fluctuating in nature as the pressure gets fluctuated in the hydraulic circuit during position control of the cylinder as per demand.

Fig. 17 depicts the position control of the cylinder showing the response of the two control strategies i.e. PID and fuzzy PID control, both by simulation and experiment. This demonstrates that the fuzzy PID control has better tracking performance than the PID control. This is due to the intelligence provided by the set of rules to the fuzzy controller to adjust the tuning parameters of the conventional PID control. The simulation results have close agreement with the experimental results which validates the simulation model. The change in position error percentage of PID experimental and fuzzy-PID experimental values with respect to demand positions are obtained as 5.8470 and 3.3879 respectively.

Fig. 18 shows the relation between inputs i.e. e and de/dt and the outputs K_p, K_i and K_d for the fuzzy controller using proportional directional control valve. The fuzzy controller gives the output and changes the tuning parameters of the PID controller

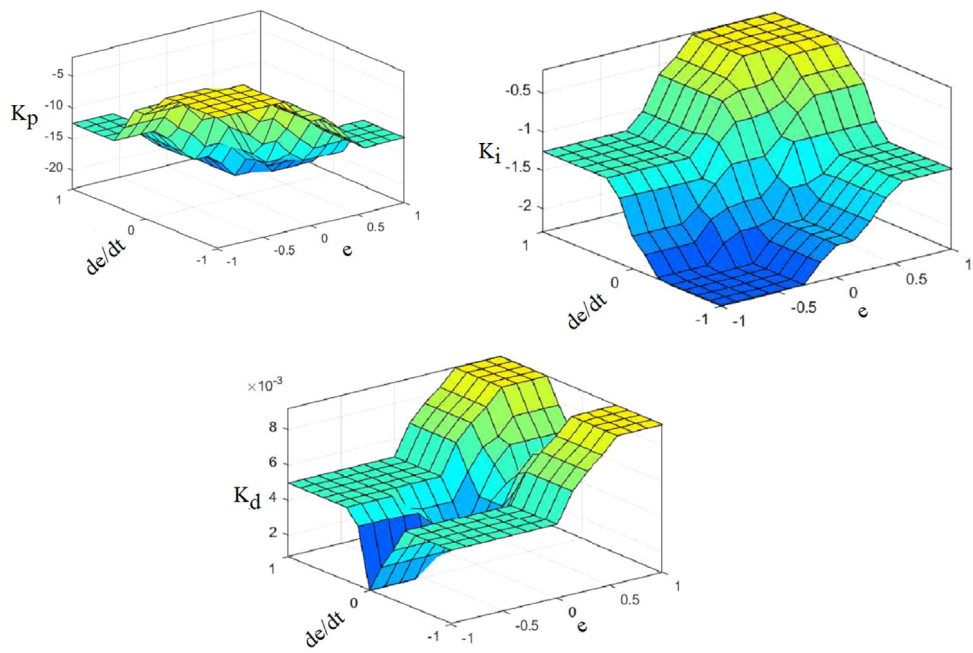

Fig. 14. Relationship between three outputs (K_p, K_i and K_d) and two inputs error (e) and rate of change of error (de/dt) for fuzzy controller using PFCV.

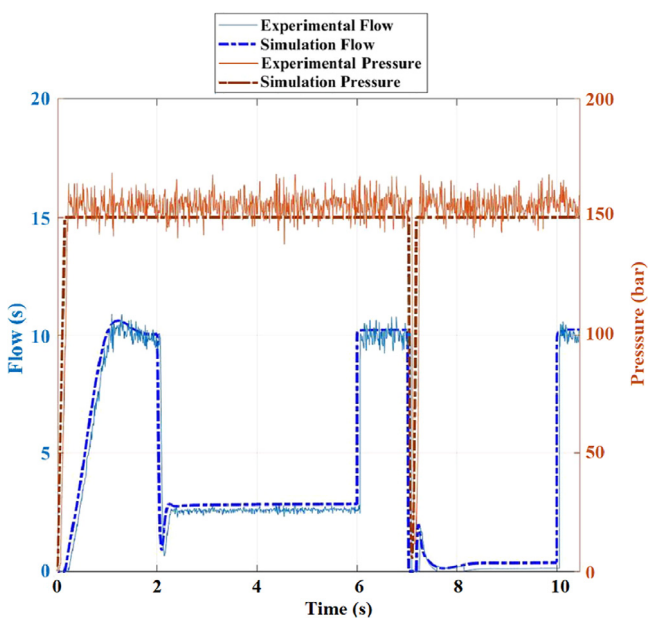

Fig. 15. Flow rate through main pressure relief valve using PDCV.

Table 7
Energy consumption comparisons of two systems.

System	Energy consumption (kJ)
Conventional system using PDCV	30.47
Proposed system using PFCV	27.867
Energy saving	8.54%

dynamically. This results in lesser fluctuations in output of the plant and better control. The range of the tuning parameters is shown in Table 6.

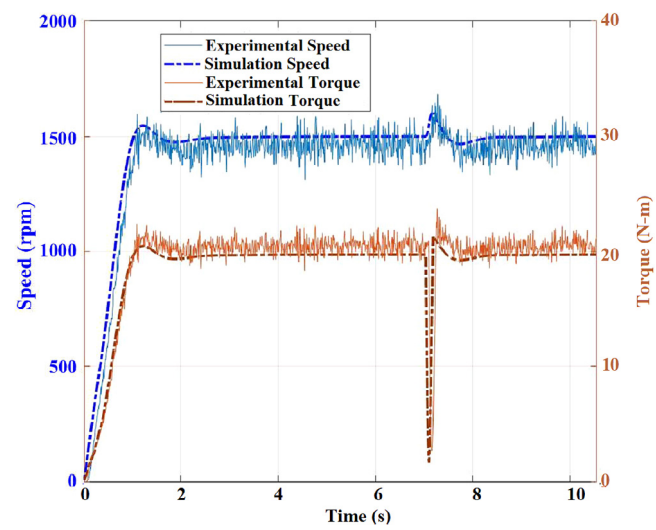

Fig. 16. Input speed and torque on the electric motor using PDCV.

7.3. Effect of pump speed and pressure difference on efficiency

Fig. 19 shows the efficiency curve for the gear pump used in the test set-up. This characteristic of the pump is used in simulation for validation of the experimental results. It has been found that by increasing the load on the gear pump the efficiency increases, and decreases with increase in the speed.

7.4. Energy consumption comparison

The energy consumed by both the hydraulic system can be expressed by the relation given below.

$$P = \int_{t}^{t+\Delta t} pQdt \tag{14}$$

where,

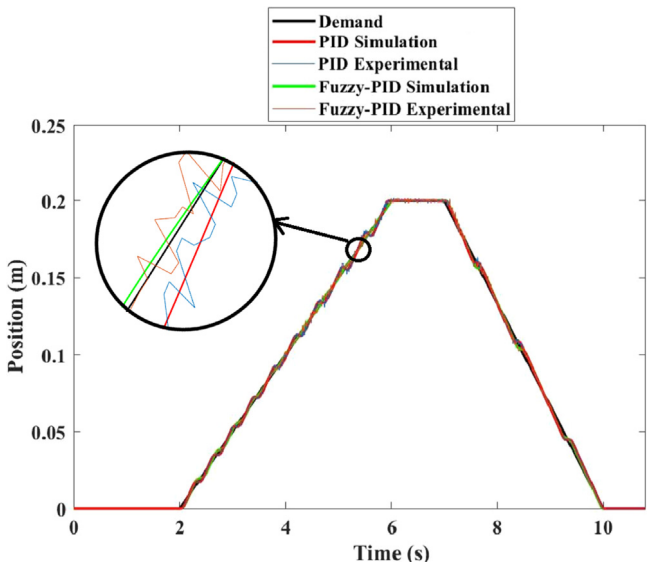

Fig. 17. Position comparison using PID and fuzzy PID control using PDCV.

P	is power outlet by the pump,
p	is the measurement of pressure sensor 5.3,
Q	is the measurement of flow sensor 10,
t	is the starting time of the experiment,
Δt	is time duration of the experiment cycle.

Fig. 20 shows the comparison of the energy consumption of the two hydraulic circuits. The energy consumption in the circuit using PDCV has more energy consumption than using the PFCV. This is due to the fact that the extra flow in the circuit using PDCV is discharged through the pressure relief valve at its cracking pressure as shown in Fig. 15. In PFCV, the extra flow as shown in Fig. 12, is bypassed at the load pressure resulting in increase in efficiency of about 8.54% which is shown in tabular form in Table 7.

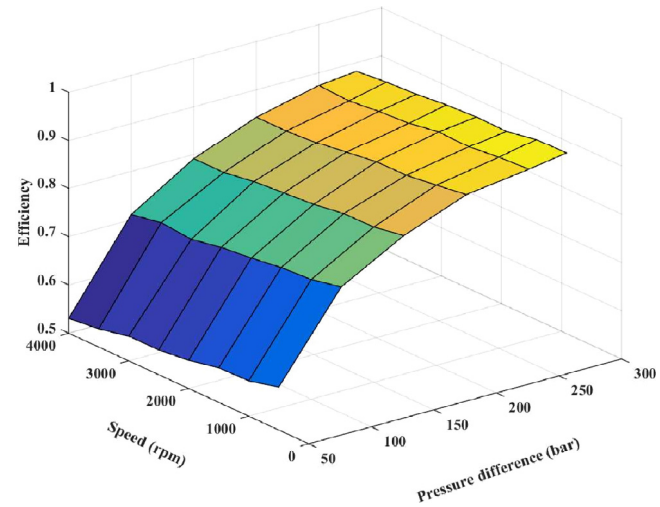

Fig. 19. Gear pump efficiency at different pressure and the speed of the pump.

8. Conclusion

In this paper, the comparison of the energy-saving position control method is carried out between the two-position control strategy by using proportional directional control valve (PDCV) and flow control valve (FCV) shorted between the cylinder ends. The simulation model is made in MATLAB/Simulink and the experiments are performed using LabVIEW software. The flow control valve shorted between the cylinders ends shows 8.54% more efficiency than the position control through proportional directional control valve as found experimentally. The position control task for the actuator is done by means of a proportional directional valve and flow control valve with a PID-fuzzy control strategy. This control and design technique provide tool for the design engineers to develop the actuators which are more energy efficient and reliable. The future scope of this work is to analyze the responses in terms of the vibrations developed in the actuators and develop the intelligent control techniques to suppress the oscillations produced while controlling the cylinder.

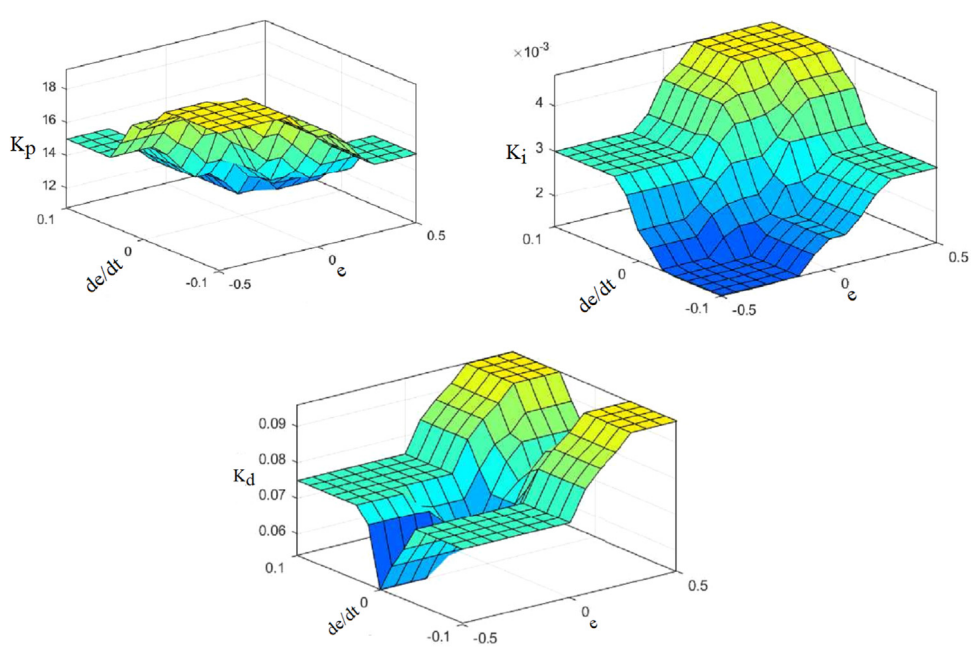

Fig. 18. Relationship between three outputs (K_p, K_i and K_d) and two inputs error (e) and rate of change of error (de/dt) for fuzzy controller using PDCV.

Please cite this article as: G. Wrat, M. Bhola, P. Ranjan et al., Energy saving and Fuzzy-PID position control of electro-hydraulic system by leakage compensation through proportional flow control valve. ISA Transactions (2020), https://doi.org/10.1016/j.isatra.2020.01.003.

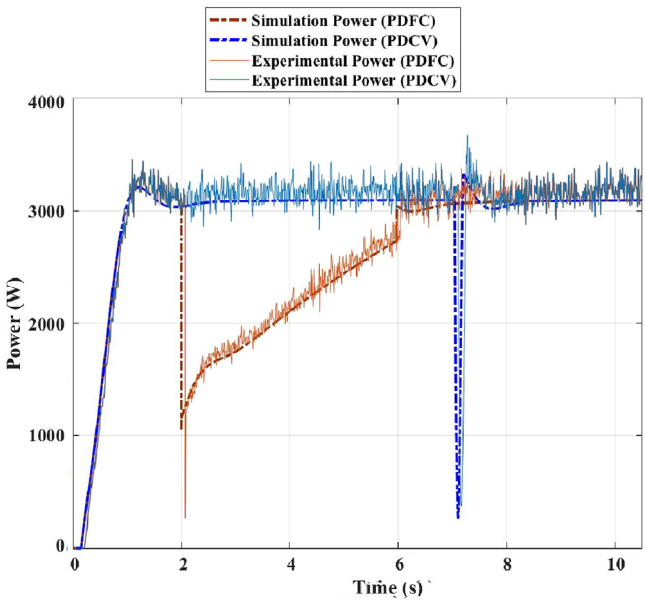

Fig. 20. Power comparison of two hydraulic circuit.

Declaration of competing interest

The authors declare that they have no known competing financial interests or personal relationships that could have appeared to influence the work reported in this paper.

Acknowledgments

This work has been supported by DST, India (Project Grant Number YSS/2015/000397) and the authors sincerely acknowledge Indian Institute of Technology (Indian School of Mines), Dhanbad for providing the experimental set up.

References

[1] Wang D, Lin X, Zhang Y. Fuzzy logic control for a parallel hybrid hydraulic excavator using genetic algorithm. Autom Constr 2011;20(5):581–7.
[2] Wang D, Zheng L, Yu H, Zhou W, Shao L. Robotic excavator motion control using a nonlinear proportional-integral controller and cross-coupled pre-compensation. Autom Constr 2016;64:1–6.
[3] Lin T, Wang Q, Hu B, Gong W. Development of hybrid powered hydraulic construction machinery. Autom Constr 2010;19(1):11–9.
[4] Hippalgaonkar R, Ivantysynova M, Zimmerman J. Fuel savings of a mini-excavator through a hydraulic hybrid displacement controlled system. In: Proceedings of the 8th international fluid power conference, Dresden, Germany 2012, p. 26–8.
[5] Hippalgaonkar R, Ivantysynova M. Optimal power management of hydraulic hybrid mobile machines. Trans ASME, J Dyn Syst Meas Control 2016;138(5).
[6] Ge L, Quan L, Zhang X, Zhao B, Yang J. Efficiency improvement and evaluation of electric hydraulic excavator with speed and displacement variable pump. Energy Convers Manage 2017;150:62–71.
[7] Shen W, Jiang J, Su X, Karimi HR. Control strategy analysis of the hydraulic hybrid excavator. J Franklin Inst B 2015;352(2):541–61.
[8] Lin T, Huang W, Ren H, Fu S, Liu Q. New compound energy regeneration system and control strategy for hybrid hydraulic excavators. Autom Constr 2016;68:11–20.
[9] Lin T, Zhou S, Chen Q, Fu S. A novel control strategy for an energy saving hydraulic system with near-zero overflowing energy-loss. IEEE Access 2018;6:33810–8.
[10] Tivay A, Zareinejad M, Rezaei SM, Baghestan K. A switched energy saving position controller for variable-pressure electro-hydraulic servo systems. ISA Trans 2014;53(4):1297–306.
[11] Chiang MH, Chien YW. Parallel control of velocity control and energy-saving control for a hydraulic valve-controlled cylinder system using self-organizing fuzzy sliding mode control. JSME Int J C 2003;46(1):224–31.
[12] Wang W, Wang B. An energy-saving control strategy with load sensing for electro-hydraulic servo systems. Stroj Vestn/J Mech Eng 2016;62(12).
[13] Baghestan K, Rezaei SM, Talebi HA, Zareinejad M. An energy-saving nonlinear position control strategy for electro-hydraulic servo systems. ISA Trans 2015;59:268–79.
[14] Wrat G, Ranjan P, Bhola M, Mishra SK, Das J. Position control and performance analysis of hydraulic system using two pump-controlling strategies. Proc Inst Mech Eng I 2018;0959651818813233.
[15] Xu B, Cheng M. Motion control of multi-actuator hydraulic systems for mobile machineries: Recent advancements and future trends. Front Mech Eng 2018;13(2):151–66.
[16] DeBoer CC, Yao B. Velocity control of hydraulic cylinders with only pressure feedback. In: ASME international mechanical engineering congress and exposition. USA: ASME New York; 2001, p. 1–9.
[17] Ding R, Zhang J, Xu B. Advanced energy management of a novel independent metering meter-out control system: A case study of an excavator. IEEE Access 2018;6:45782–95.
[18] Jin M, Wang Q. Energy-saving control for electro-hydraulic systems under time-varying negative loads. Proc Inst Mech Eng I 2018;232(5):608–21.
[19] Bhola M, Kumar N, Ghoshal SK. Reducing fuel consumption of front-end loader using regenerative hydro-static drive configuration-an experimental study. Energy 2018;162:158–70.
[20] Triet HH, Ahn KK. Comparison and assessment of a hydraulic energy-saving system for hydrostatic drives. Proc Inst Mech Eng I 2011;225(1):21–34.
[21] Wang T, Wang Q. An energy-saving pressure-compensated hydraulic system with electrical approach. IEEE/ASME Trans Mechatronics 2014;19(2):570–8.
[22] Xu B, Ouyang X, Yang H. Energy-saving system applying pressure accumulators for VVVF controlled hydraulic elevators. In: ASME 2003 international mechanical engineering congress and exposition. American Society of Mechanical Engineers; 2003, p. 117–22.
[23] Gong J, Zhang D, Liu C, Zhao Y, Hu P. Power control strategy and performance evaluation of a novel electro-hydraulic energy-saving system. Appl Energy 2019;233:724–34.
[24] Ning CM, Chao ZQ, Li HY, Han SS. Control performance and energy-saving potential analysis of a hydraulic hybrid luffing system for a bergepanzer. IEEE Access 2018;6:34555–66.
[25] Ding H, Zhao J, Cheng G, Wright S, Yao Y. The influence of valve-pump weight ratios on the dynamic response of leaking valve-pump parallel control hydraulic systems. Appl Sci 2018;8(7):1201.
[26] Deng C, Xie SQ, Wu J, Shao XY. Position error compensation of semi-closed loop servo system using support vector regression and fuzzy PID control. Int J Adv Manuf Technol 2014;71(5–8):887–98.
[27] Xia G, Xue J, Jiao J. Dynamic positioning control system with input time-delay using fuzzy approximation approach. Int J Fuzzy Syst 2018;20(2):630–9.
[28] Wang Y, Wu P, Liu C. Adaptive fuzzy PID control of hydraulic servo control system for large axial flow compressor. In: IOP conference series: Materials science and engineering, Vol. 231. IOP Publishing; 2017, p. 012086, (1).
[29] Çetin Ş, Akkaya AV. Simulation and hybrid fuzzy-PID control for positioning of a hydraulic system. Nonlinear Dynam 2010;61(3):465–76.
[30] Tadesse A, Jungong M. Modeling and simulations on a fuzzy-PID position controller of electro hydraulic servo system. In: 2015 12th international conference on fuzzy systems and knowledge discovery (FSKD). IEEE; 2015, p. 96–103.
[31] Mann GK, Hu BG, Gosine RG. Analysis of direct action fuzzy PID controller structures. IEEE Trans Syst Man Cybern B 1999;29(3):371–88.