Synchronous-Reference-Frame-Based Control Method for UPQC Under Unbalanced and Distorted Load Conditions

Metin Kesler and Engin Ozdemir, *Senior Member, IEEE*

***Abstract*—This paper presents a new synchronous-reference-frame (SRF)-based control method to compensate power-quality (PQ) problems through a three-phase four-wire unified PQ conditioner (UPQC) under unbalanced and distorted load conditions. The proposed UPQC system can improve the power quality at the point of common coupling on power distribution systems under unbalanced and distorted load conditions. The simulation results based on Matlab/Simulink are discussed in detail to support the SRF-based control method presented in this paper. The proposed approach is also validated through experimental study with the UPQC hardware prototype.**

***Index Terms*—Active power filter (APF), harmonics, phase-locked loop (PLL), power quality (PQ), synchronous reference frame (SRF), unified power-quality (PQ) conditioner (UPQC).**

I. Introduction

UNIFIED POWER-QUALITY (PQ) conditioner (UPQC) systems were widely studied by many researchers as an eventual method to improve the PQ in electrical distribution systems [1]–[11]. The aim of a UPQC is to eliminate the disturbances that affect the performance of the critical load in power systems. The UPQC, therefore, is expected to be one of the most powerful solutions to large-capacity loads sensitive to supply-voltage-imbalance distortions [3]. The UPQC, which has two inverters that share one dc link, can compensate the voltage sag and swell and the harmonic current and voltage, and it can control the power flow and voltage stability. Moreover, the UPQC with the combination of a series active power filter (APF) and a shunt APF can also compensate the voltage interruption if it has some energy storage or battery in the dc link [4].

The shunt APF is usually connected across the loads to compensate for all current-related problems, such as the reactive power compensation, power factor improvement, current harmonic compensation, neutral current compensation, dc-link voltage regulation, and load unbalance compensation, whereas the series APF is connected in series with a line through a series transformer (ST). It acts as a controlled voltage source and can compensate all voltage-related problems, such as voltage harmonics, voltage sag, voltage swell, flicker, etc. [2], [3].

In this paper, the proposed synchronous-reference-frame (SRF)-based control method for the UPQC system is optimized without using transformer voltage, load, and filter current measurement, so that the numbers of the current measurements are reduced and the system performance is improved. In the proposed control method, load voltage, source voltage, and source current are measured, evaluated, and tested under unbalanced and distorted load conditions using Matlab/Simulink software. The proposed SRF-based method is also validated through experimental study.

II. UPQC

The UPQC for harmonic elimination and simultaneous compensation of voltage and current, which improve the PQ, offered for other harmonic sensitive loads at the point of common coupling (PCC). In almost all of the papers on UPQC, it is shown that the UPQC can be utilized to solve PQ problems simultaneously [12]–[15]. Fig. 1 shows a basic system configuration of a general UPQC with series and shunt APFs. The main aim of the series APF is to obtain harmonic isolation between the load and supply. It has the capability of voltage imbalance compensation as well as voltage regulation and harmonic compensation at the utility-consumer PCC. The shunt APF is used to absorb current harmonics, to compensate for reactive power, and to regulate the dc-link voltage between both APFs.

III. SRF

The conventional SRF method can be used to extract the harmonics contained in the supply voltages or currents. For current harmonic compensation, the distorted currents are first transferred into two-phase stationary coordinates using $\alpha-\beta$ transformation (same as in $p-q$ theory). After that, the stationary frame quantities are transferred into synchronous rotating frames using cosine and sinus functions from the phase-locked loop (PLL). The sinus and cosine functions help to maintain the synchronization with supply voltage and current. Similar to the $p-q$ theory, using filters, the harmonics and fundamental components are separated easily and transferred back to the $a-b-c$ frame as reference signals for the filter. The conventional SRF algorithm is also known as $d-q$ method, and it is based on $a-b-c$ to $d-q-0$ transformation (park transformation), which is proposed for active filter compensation [13]. Several APF and UPQC application works presented in the literature are about

Manuscript received November 29, 2009; revised April 22, 2010 and August 11, 2010; accepted October 19, 2010. Date of publication December 20, 2010; date of current version August 12, 2011.

M. Kesler is with the Department of Computer Engineering, Bilecik University, Bilecik 11210, Turkey (e-mail: metin.kesler@bilecik.edu.tr).

E. Ozdemir is with the Electrical Education Department, Kocaeli University, Kocaeli 41380, Turkey (e-mail: eozdemir@kocaeli.edu.tr).

Color versions of one or more of the figures in this paper are available online at http://ieeexplore.ieee.org.

Digital Object Identifier 10.1109/TIE.2010.2100330

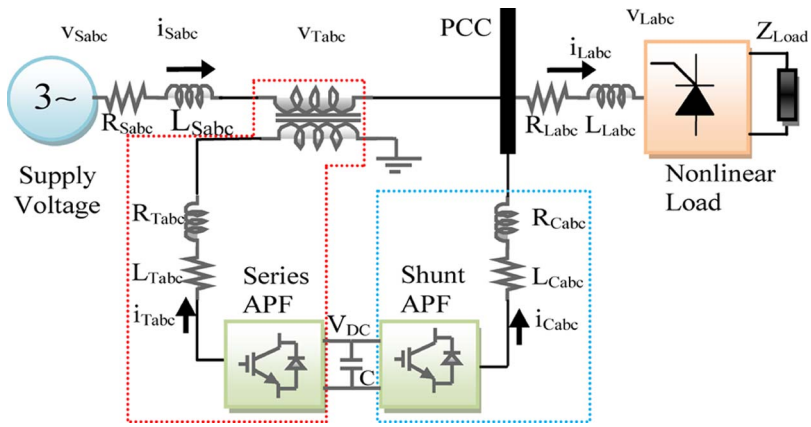

Fig. 1. Basic system configuration of UPQC.

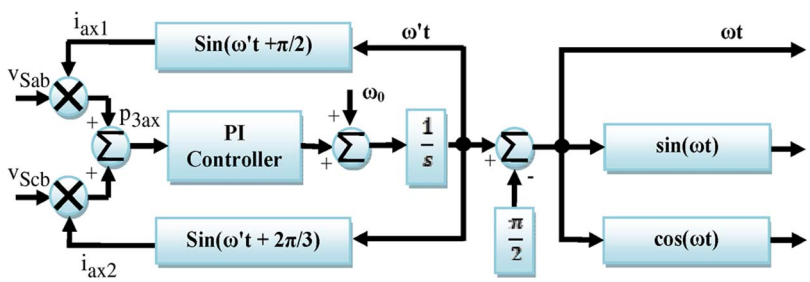

Fig. 2. Modified PLL circuit block diagram.

improving the performance of the compensator [14]–[20], [32], [33], [37]–[39].

In the SRF-based APF applications in three-phase four-wire (3P4W) systems, voltage and current signals are transformed into the conventional rotating frame ($d-q-0$). In the SRF method, the transformation angle (ωt) represents the angular position of the reference frame which is rotating at a constant speed in synchronism with the three-phase ac voltage. In nonlinear load conditions, harmonics and reactive currents of the load are determined by PLL algorithms. Then, currents with the same magnitude and reverse phase are produced and injected to the power system in order to compensate neutral current, harmonics, and reactive power. In the stationary reference frame, $\alpha-\beta-0$ coordinates are stationary, while in the SRF, $d-q-0$ coordinates rotate synchronously with supply voltages. Thus, the angular position of the supply voltage vector shows the angular position of the SRF [13]–[20], [31]–[33].

In 3P4W systems, since the i_d component of the current in the "d" coordinate is in phase with voltage, it corresponds to the positive-sequence current. However, the i_q component of the current in the "q" coordinate is orthogonal to the i_d component of the current, and it corresponds to the negative-sequence reactive current. The i_0 component of the current, which is orthogonal to i_d and i_q, corresponds to the zero-sequence component of the current. If the i_q component of the current is negative, the load has inductive reactive power. If it is positive, the load has capacitive reactive power. In 3P4W nonlinear power systems, the i_d and i_q components of the current include both oscillating components ($\tilde{i}_d$ and $\tilde{i}_q$) and average components ($\bar{i}_d$ and $\bar{i}_q$), as shown in

$$i_d = \tilde{i}_d + \bar{i}_d \quad i_q = \tilde{i}_q + \bar{i}_q. \tag{1}$$

The oscillating components ($\tilde{i}_d$ and $\tilde{i}_q$) of the current correspond to harmonic currents, and the average components of the current correspond to the active ($\bar{i}_d$) and reactive ($\bar{i}_q$) currents [13], [14], [20]. In the balanced and linear three-phase systems, the load voltage and current signals generally consist of fundamental positive-sequence components. However, in unbalanced and nonlinear load conditions, they include fundamental positive-, negative-, and zero-sequence components. In APF applications, the fundamental positive-sequence components of the signals should be separated in order to compensate the harmonics.

IV. Proposed SRF-Based Control Algorithm

Among the several APF control methods presented in the literature, the SRF-based control method is one of the most conventional and the most practical methods [11], [12], [14]–[17], [32], [33]. The SRF method presents excellent characteristics but it requires decisive PLL techniques. This paper presents a new technique based on the SRF method using the modified PLL algorithm and compares its performances with that of the conventional SRF method under unbalanced and distorted load conditions.

The proposed SRF control method uses $a-b-c$ to $d-q-0$ transformation equations, filters, and the modified PLL algorithm shown in Fig. 2. The sensing of only the source current to realize an SRF-based controller or another type of controller for shunt APF is not new, and this kind of controller can be found in literature [24]–[28]. The proposed SRF-based controller with modified PLL for the UPQC under 3P4W topology and particularly the SRF-based controller for the series APF part is not presented in the literature. The proposed method is simple

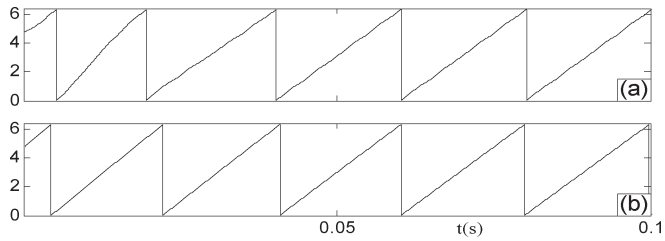

Fig. 3. Transformation angle (ωt) waveforms for the (a) conventional and (b) modified PLL algorithms.

and easy to implement and offers reduced current measurement; therefore, it can be run efficiently in DSP platforms. Hence, the proposed modified PLL algorithm efficiently improves the performance of the UPQC under unbalanced and distorted load conditions.

A. Modified PLL

Some PLL algorithms were used with SRF and other control methods in APF applications [13]–[16], [19]–[22], [36]. The conventional PLL circuit works properly under distorted and unbalanced system voltages. However, a conventional PLL circuit has low performance for highly distorted and unbalanced system voltages. In this paper, the modified PLL circuit shown in Fig. 2 is employed for the determination of the positive-sequence components of the system voltage signals. The reason behind making a modification in conventional PLL is to improve the UPQC filtering performance under highly distorted and unbalanced voltage conditions.

The simulation results according to the transformation angle (ωt) waveform for, first, the conventional PLL [22] and, second, the modified PLL algorithms are shown in Fig. 3. The modified PLL has better performance than that of the conventional PLL, since the output (ωt) of the modified PLL has a low oscillation under highly distorted and unbalanced system voltage conditions.

The modified PLL circuit calculates the three-phase auxiliary total power by applying three-phase instantaneous source line voltages, i.e., v_{Sab} and v_{Scb} ($v_{\mathrm{Sab}} = v_{\mathrm{Sa}} - v_{\mathrm{Sb}}$; $v_{\mathrm{Scb}} = v_{\mathrm{Sc}} - v_{\mathrm{Sb}}$), in order to determine the transformation angle (ωt) of the system supply voltage.

The modified PLL circuit is designed to operate properly under distorted and unbalanced voltage waveforms. The three-phase line voltages are measured and used as inputs, and the transformation angle (ωt) is calculated as output signal of the modified PLL circuit. The measured line voltages are multiplied by auxiliary (i_{ax1} and i_{ax2}) feedback currents with unity amplitude, and one of them leads 120° to another to obtain three-phase auxiliary instantaneous active power $(p_{3\mathrm{ax}})$.

The reference fundamental angular frequency $(\omega_0 = 2\pi f)$ is added to the output of the proportional–integral (PI)$(P = 0.05;\ I = 0.01)$ controller to stabilize the output. The auxiliary transformation angle $(\omega' t)$ is obtained by the integration of this calculation, but the produced $\omega' t$ leads 90° to the system fundamental frequency; therefore, the $-\pi/2$ is added to the output of the integrator in order to reach system fundamental frequency. The PLL circuit arrives at a stabile operating point when three-phase auxiliary instantaneous active power $(p_{3\mathrm{ax}})$ becomes zero or has low frequency oscillation. In addition, the transformation angle (ωt) which is the output of the modified PLL circuit reaches the fundamental positive-sequence components of the line voltages. Consequently, $\sin(\omega t)$ in the modified PLL output is in the same phase angle with the fundamental positive-sequence components of the measured source voltages (v_{sa}).

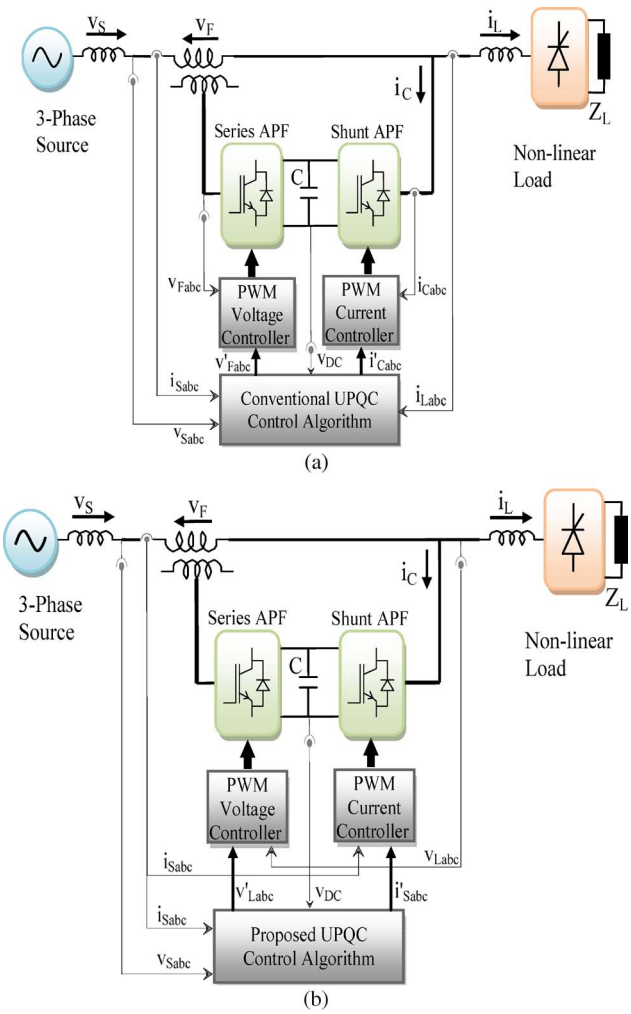

Fig. 4. (a) Conventional and (b) proposed UPQC control block diagrams.

The modified PLL circuit can operate satisfactorily under highly distorted and unbalanced system voltages as long as the PI gains in the PLL algorithm are tuned accordingly. The proposed modified PLL circuit has been arranged for use directly in the proposed SRF-based UPQC control method and has been examined as simple, fast, and robust for utility applications with emphasis on operation under unbalanced and distorted load and supply voltage conditions.

The conventional and proposed UPQC control block diagrams are shown in Fig. 4. In the conventional control method [6], [22] shown in Fig. 4(a), sensing three-phase source current and voltages, load current, shunt APF filter current, and series APF injected voltages in transformers along with a dc-link voltage are used to compute the reference switching signals in the UPQC.

In the proposed method shown in Fig. 4(b), sensing three-phase source current and voltages and load voltages along with a dc-link voltage are adequate to compute the reference switching signals in the UPQC. Generally, for SRF-based controllers,

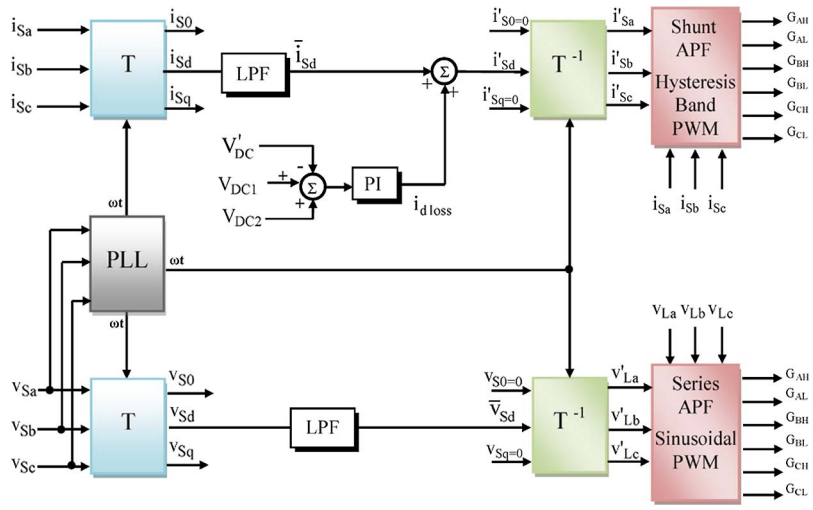

Fig. 5. Proposed SRF-based UPQC control block diagram.

either source currents (indirect method) or shunt active filter and load currents (direct method) are used for reference-current signal generation. The proposed SRF-based control method presents some advantages, compared with other methods. The overall control system can be easily applied since it has less current measurement requirements. The proposed method has an effective response under distorted and unbalanced load conditions. The proposed control strategy is capable of extracting most of the load-current and source-voltage distortions successfully.

B. Reference-Voltage Signal Generation for Series APF

The proposed SRF-based UPQC control algorithm can be used to solve the PQ problems related with source-voltage harmonics, unbalanced voltages, and voltage sag and swell at the same time for series APFs. In the proposed method, the series APF controller calculates the reference value to be injected by the STs, comparing the positive-sequence component of the source voltages with load-side line voltages. The series APF reference-voltage signal-generation algorithm is shown in Fig. 5. In (4), the supply voltages v_{Sabc} are transformed $d-q-0$ by using the transformation matrix $\mathbf{T}$ given in (2). In addition, the modified PLL conversion is used for reference-voltage calculation

$$\mathrm{T}=\sqrt{\frac{2}{3}}\begin{bmatrix}1/\sqrt{2} & 1/\sqrt{2} & 1/\sqrt{2}\\ \sin(wt) & \sin(wt-2\pi/3) & \sin(wt+2\pi/3)\\ \cos(wt) & \cos(wt-2\pi/3) & \cos(wt+2\pi/3)\end{bmatrix} \quad (2)$$

$$\mathrm{T}^{-1}=\sqrt{\frac{2}{3}}\begin{bmatrix}1/\sqrt{2} & \sin(wt) & \cos(wt)\\ 1/\sqrt{2} & \sin(wt-2\pi/3) & \cos(wt-2\pi/3)\\ 1/\sqrt{2} & \sin(wt+2\pi/3) & \cos(wt+2\pi/3)\end{bmatrix} \quad (3)$$

$$\begin{bmatrix}v_{\mathrm{S0}}\\ v_{\mathrm{Sd}}\\ v_{\mathrm{Sq}}\end{bmatrix}=\mathrm{T}\begin{bmatrix}v_{\mathrm{Sa}}\\ v_{\mathrm{Sb}}\\ v_{\mathrm{Sc}}\end{bmatrix} \quad (4)$$

The instantaneous source voltages (v_{Sd} and v_{Sq}) include both oscillating components ($\tilde{v}_{\mathrm{Sd}}$ and $\tilde{v}_{\mathrm{Sq}}$) and average components ($\bar{v}_{\mathrm{Sd}}$ and $\bar{v}_{\mathrm{Sq}}$) under unbalanced source voltage with harmonics. The oscillating components of v_{Sd} and v_{Sq} consist of the harmonics and negative-sequence components of the source voltages under distorted load conditions. An average component includes the positive-sequence components of the voltages. The zero-sequence part (v_{S0}) of the source voltage occurs when the source voltage is unbalanced. The source voltage in the d-axis (v_{Sd}) given in (5) consists of the average and oscillating components

$$v_{\mathrm{Sd}}=\bar{v}_{\mathrm{Sd}}+\tilde{v}_{\mathrm{Sd}}. \quad (5)$$

The load reference voltages (v'_{Labc}) are calculated as given in (6). The inverse transformation matrix $\mathbf{T}^{-1}$ given in (3) is used for producing the reference load voltages by the average component of source voltage and ωt produced in the modified PLL algorithm. The source-voltage positive-sequence average value $(\bar{v}_{\mathrm{Sd}})$ in the d-axis is calculated by LPF, as shown in Fig. 5. Zero and negative sequences of source voltage are set to zero in order to compensate load voltage harmonics, unbalance, and distortion, as shown in Fig. 5

$$\begin{bmatrix}v'_{\mathrm{La}}\\ v'_{\mathrm{Lb}}\\ v'_{\mathrm{Lc}}\end{bmatrix}=\mathrm{T}^{-1}\begin{bmatrix}0\\ \bar{v}_{\mathrm{Sd}}\\ 0\end{bmatrix}. \quad (6)$$

The produced load reference voltages (v'_{La}, v'_{Lb}, and v'_{Lc}) and load voltages (v_{La}, v_{Lb}, and v_{Lc}) are compared in the sinusoidal pulsewidth modulation controller to produce insulated-gate bipolar transistor (IGBT) switching signals and to compensate all voltage-related problems, such as voltage harmonics, sag, swell, voltage unbalance, etc., at the PCC.

C. Reference-Source-Current Signal Generation for Shunt APF

The shunt APF described in this paper is used to compensate the current harmonics generated in the nonlinear load and the reactive power. The proposed SRF-based shunt APF reference-source-current signal-generation algorithm uses only source voltages, source currents, and dc-link voltages. The source currents are transformed to $d-q-0$ coordinates, as given in (7) using (1) and (ωt) coming from the modified PLL. In 3P4W systems and nonlinear load conditions, the instantaneous source currents (i_{Sd} and i_{Sq}) include both oscillating components ($\tilde{i}_{\mathrm{Sd}}$ and $\tilde{i}_{\mathrm{Sq}}$) and average components ($\bar{i}_{\mathrm{Sd}}$ and $\bar{i}_{\mathrm{Sq}}$). The oscillating components consist of the harmonic and

negative-sequence components of the source currents. The average components consist of the positive-sequence components of current and correspond to reactive currents. The negative-sequence component of source current (i_{S0}) appears when the load is unbalanced. The proposed SRF-based method employs the positive-sequence average component $(\bar{i}_{\mathrm{Sd}})$ in the d-axis and the zero- and negative-sequence component (i_{S0} and i_{S0}) in the 0- and q-axes of the source currents, in order to compensate harmonics and unbalances in the load

$$\begin{bmatrix} i_{\mathrm{S0}} \\ i_{\mathrm{Sd}} \\ i_{\mathrm{Sq}} \end{bmatrix} = T \begin{bmatrix} i_{\mathrm{Sa}} \\ i_{\mathrm{Sb}} \\ i_{\mathrm{Sc}} \end{bmatrix}. \tag{7}$$

The active power is injected to the power system by the series APF in order to compensate the active power losses of the UPQC power circuit, which causes dc-link voltage reduction. Some active power should be absorbed from the power system by the shunt APF for regulating dc-link voltage. For this purpose, the dc-link voltage is compared with its reference value (v'_{DC}), and the required active current (i_{dloss}) is obtained by a PI controller. The source current fundamental reference component is calculated by adding to the required active current and source current average component $(\bar{i}_{\mathrm{Sd}})$, which is obtained by an LPF, as given in

$$i'_{\mathrm{Sd}} = i_{\mathrm{dloss}} + \bar{i}_{\mathrm{Sd}}. \tag{8}$$

In the proposed method, the zero- and negative-sequence components of the source current reference (i'_{s0} and i'_{Sq}) in the 0- and q-axes are set to zero in order to compensate the harmonics, unbalance, distortion, and reactive power in the source current. The source current references are calculated as given in (9) to compensate the harmonics, neutral current, unbalance, and reactive power by regulating the dc-link voltage

$$\begin{bmatrix} i'_{\mathrm{Sa}} \\ i'_{\mathrm{Sb}} \\ i'_{\mathrm{Sc}} \end{bmatrix} = T^{-1} \begin{bmatrix} 0 \\ i'_{\mathrm{Sd}} \\ 0 \end{bmatrix}. \tag{9}$$

The produced reference-source currents (i'_{Sa}, i'_{Sb}, and i'_{Sc}) and measured source currents (i_{Sa}, i_{Sb}, and i_{Sc}) are compared by a hysteresis band current controller for producing IGBT switching signals to compensate all current-related problems, such as the reactive power, current harmonic, neutral current, dc-link voltage regulation, and load-current unbalance. The proposed SRF-based UPQC control method block diagram is shown in Fig. 5.

V. Simulation Results

In this study, the proposed SRF-based control algorithm for the UPQC is evaluated by Matlab/Simulink software under unbalanced and distorted load-current and source-voltage conditions since the unbalanced load currents are very common and, yet, an important problem in 3P4W distribution systems [34]. The UPQC system parameters used in this study are given in Table I. In the simulation studies, the results are specified before and after the operation of the UPQC system. In addition, when the UPQC system was operated, the load was changed and the dynamic response of the system was tested. Then, the proposed control method has been examined under the nonideal mains voltage and unbalanced load-current conditions in simulation. The passive filters with R and C are used to remove the switching ripple in the voltage and current waveforms. Finally, the voltage and current harmonic compensation capability of the proposed UPQC control method is shown in Table II as simulation results and total harmonic distortion (THD) levels. The THD levels are given before and after filter operation under the conventional and proposed SRF

TABLE I
UPQC Experimental and Simulation Parameters

	Parameters		Value
Source	Voltage	V_{Sabc}	380 V_{rms}
	Frequency	f	50 Hz
Load	3-Phase AC Line Inductance	L_{Labc}	1.47 mH
	1-Phase AC Line Inductance	L_{La1}	0.75 mH
	3-Phase DC Inductance	L_{dc3}	11.5 mH
	3-Phase DC Resistor	R_{dc3}	30 Ω
	1-Phase DC Resistor	R_{dc1}	100 Ω
	1-Phase DC Capacitor	C_{dc1}	75 μF
dc Link	Voltage	V'_{DC}	700 V
	Two series capacitor	C_1,C_2	2200 μF
Shunt APF	AC Line Inductance	L_{Cabc}	3 mH
	Filter Resistor	R_{Cabc}	5 Ω
	Filter Capacitor	C_{Cabc}	4.7 μF
	Switching Frequency	f_{pwm}	~15 kHz
Series APF	AC Line Inductance	L_{Tabc}	1.5 mH
	Filter Resistor	R_{Tabc}	5 Ω
	Filter Capacitor	C_{Tabc}	26 μF
	Switching Frequency	f_{pwm}	12 kHz
	Three series transformer	S	5.4 kVA

TABLE II
Comparing Conventional and Proposed UPQC Control Methods for Simulation Results and THD Levels of Voltage and Current Waveforms at the PCC

System voltage Condition	Phases	Before UPQC		After UPQC control method with			
				Conventional		Proposed	
		Currents (A)	Voltages (V)	Currents (A)	Voltages (V)	Currents (A)	Voltages (V)
Balanced THD (%)	A	35.4	0.1	6.7	0.8	2.7	0.7
	B	26.2	0.1	3.6	0.9	3.5	0.9
	C	27.6	0.1	3.7	1.0	3.5	0.9
Unbalanced THD (%)	A	35.4	0.1	4.2	0.6	3.3	0.8
	B	26.2	0.1	2.7	0.6	3.4	0.8
	C	27.6	0.1	2.8	0.6	3.9	0.9
Balanced with distorted THD (%)	A	35.4	19.7	6.8	2.3	3.1	1.1
	B	26.2	22.7	4.1	2.7	3.1	1.4
	C	27.6	19.7	4.0	2.9	3.4	1.3
Unbalanced with distorted THD (%)	A	35.4	22.4	6.6	3.7	3.2	1.4
	B	26.2	24.2	3.7	2.6	3.5	1.6
	C	27.6	19.7	4.1	2.9	3.4	1.3
RMS	A	15.3	187	15.8	210	14.3	221
	B	12.7	205	15.3	211	14.1	220
	C	12.5	219	15.3	211	14.2	221
	N	2.4	-	0.09	-	0.05	-

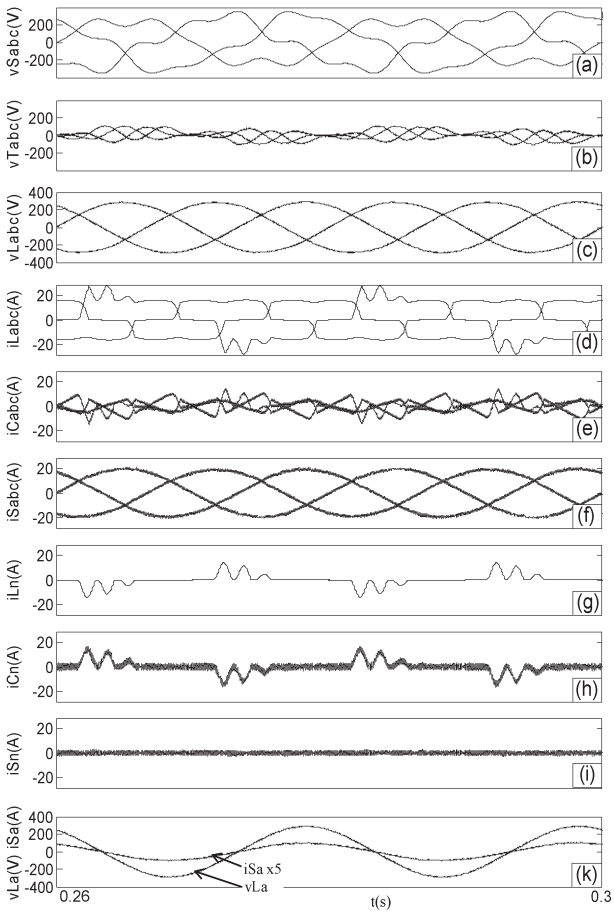

Fig. 6. Simulation results of the proposed UPQC control method for (a) unbalanced and distorted mains voltages, (b) injected transformer voltages, (c) load voltages, (d) unbalanced and nonlinear load currents, (e) injected compensator currents, (f) source currents, (g) load neutral current, (h) injected compensator current, (i) source neutral current, and (k) reactive power compensation.

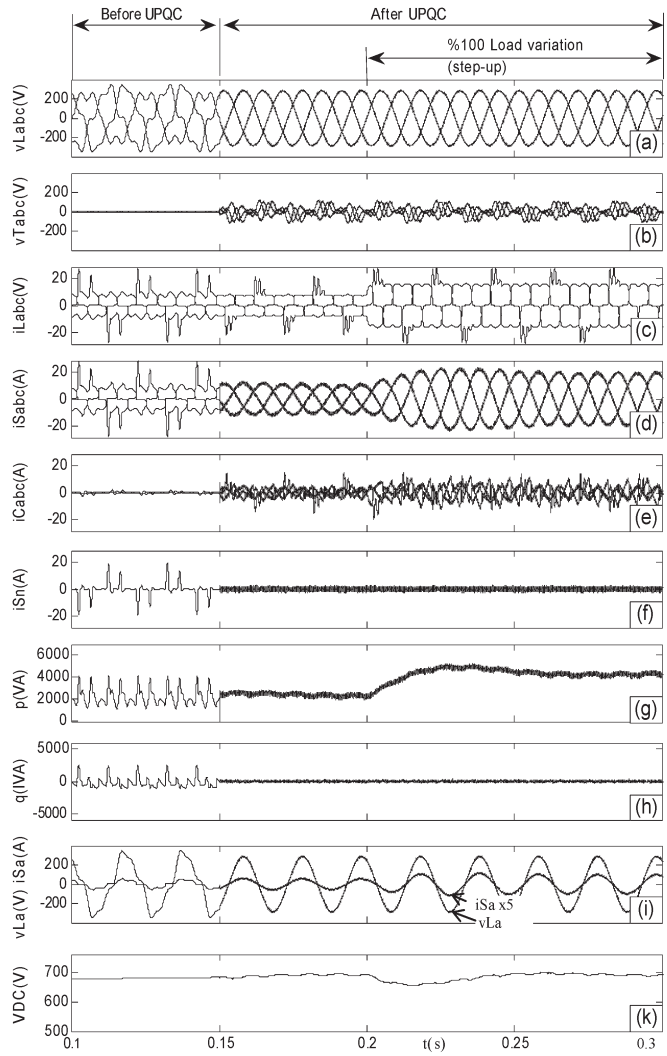

Fig. 7. Simulation results for operational performance of the UPQC system. (a) Load voltages, (b) injected transformer voltages, (c) load currents, (d) source currents, (e) injected compensator currents, (f) source neutral current, (g) instantaneous active power, (h) instantaneous reactive power, (i) load voltage and source current for phase a, and (k) dc-link voltage.

methods. The obtained results show that the proposed control method allows THD levels of 3.0% current and 1.4% voltage by mitigation of all harmonic components. The proposed control strategy is capable of extracting most of the load-current and source-voltage distortions successfully.

In the proposed SRF-based control algorithm, the mains currents (i_{Sabc}) and voltages (v_{Sabc}) are measured to calculate the shunt APF reference current, and the mains and load voltages (v_{Labc}) are used in the series APF controller. Shown in Fig. 6 are the proposed UPQC control method simulation results for the following conditions: 1) unbalanced and distorted mains voltages; 2) injected transformer voltages; 3) load voltages; 4) unbalanced and nonlinear load currents; 5) injected compensator currents; 6) source currents; 7) load neutral current; 8) injected compensator current; 9) source neutral current; and 10) reactive power compensation.

The proposed UPQC control algorithm has the ability of compensating both the harmonics and reactive power of the load, and the neutral current is also eliminated. The proposed control method has been evaluated and tested under dynamical and steady-state load conditions. Simulation results for under load changing are shown in Fig. 7. In this case, the UPQC system is operated in 0.15 s and load-current amplitudes increase approximately 100% in 0.2 s. The output voltage shows almost invisible transient during 100% step load change in the proposed control method. A better dynamic performance can be clearly seen from Fig. 7 under load changing.

The current and voltage with distortion is compensated to create the sinusoidal waveforms at the PCC. Before compensation, the THD level of the load voltage in phase a was 20.2% and the source current was 31.2%; after compensation, the THD level of the load voltage is approximately 1.4% and the source current is approximately 3.0%. The harmonics and unbalanced components are compensated excellently in case of unbalanced and distorted current and voltage at the PCC. Simulation results show that the proposed control strategy compensates harmonic components as well as most of the other unbalanced load-current distortions. It is shown that the UPQC can compensate the voltage and current problems simultaneously and that it has excellent compensating characteristics even when the unbalanced components occur in electric power systems with 3P4W.

The obtained simulation results show that the proposed UPQC control technique with the modified PLL circuit has better compensation performance than the conventional PLL.

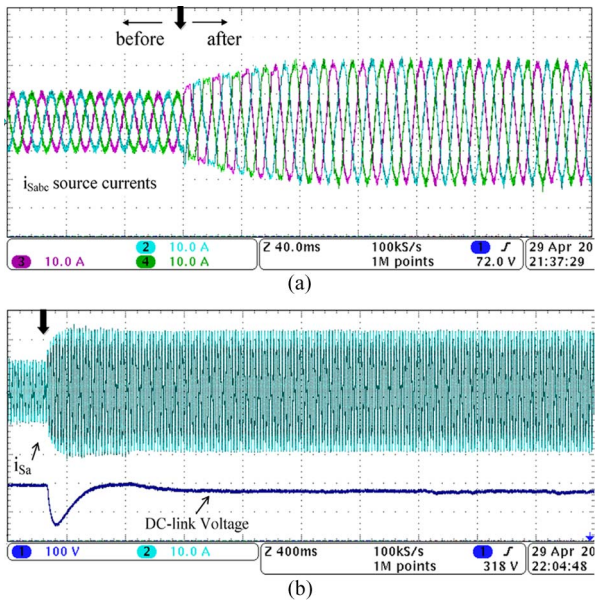

Fig. 8. Experimental results for dc-link voltage and source current (i_{Sabc}) before and after load variation (load step-up).

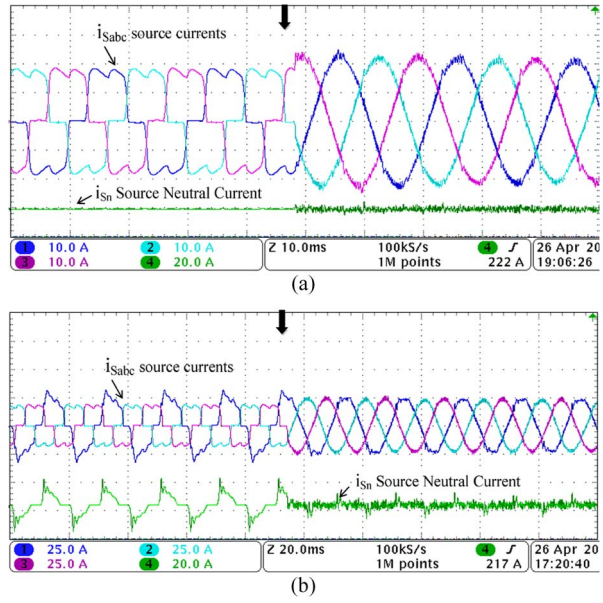

Fig. 9. Experimental results for source current (i_{Sabc}) and neutral current (i_{Sn}) before and after filter operation in (a) balanced and (b) unbalanced load-current conditions.

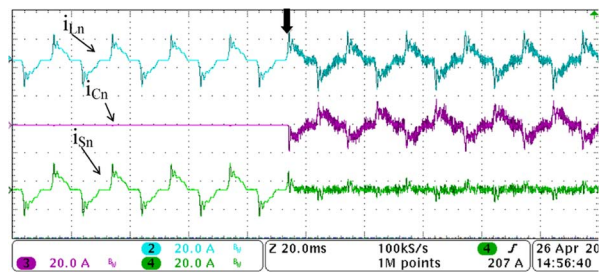

Fig. 10. Experimental results for load neutral (i_{Ln}), filter neutral (i_{Cn}), and source neutral current (i_{Sn}).

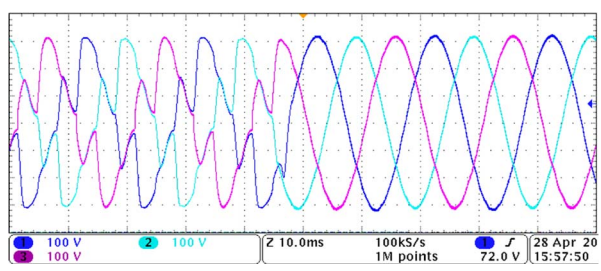

Fig. 11. Experimental results for voltages before and after filter operation in three-phase form at the PCC.

VI. Experimental Results

The aim of the proposed UPQC system is not only to compensate for the current harmonics produced by a diode-bridge rectifier of 10 kVA but also to eliminate the voltage harmonics contained in the receiving terminal voltage from the load terminal voltage. The three-phase source voltage is 400 V, and the source frequency is 50 Hz. The experimental prototype in the 3P4W UPQC system consists of two voltage-controlled inverters (shunt and series APFs) sharing the same dc bus in split-capacitor topology and three DSP processors for controlling the UPQC system and computer communication for all system control functions.

The series APF is connected in series with the neutral conductor via a switching-ripple RC filter, R_T and C_T, and a matching ST. The dc links of both shunt and series APFs are connected to two common series 2200-μF dc capacitors under 700-V dc in split capacitor topology. A three-phase and a single-phase diode bridge rectifier are used as nonlinear loads, and the effect of change in load current is recorded for each phase [30].

All of the circuit parameters and experimental conditions are set up nearly the same as the simulation conditions. The experimental results show that the control objectives are satisfied. Although the proposed SRF-based control scheme cannot be studied for unbalanced mains voltage conditions by reason of laboratory case, an optimal control can be designed to eliminate this problem experimentally, which has been discussed as a future work.

The experimental results for dc-link voltage and source current (i_{Sabc}) before and after load variation (load step-up) are shown in Fig. 8. These experimental results show that the PQ compensation features of UPQC, by appropriate control of shunt APF, can be done effectively.

The shunt APF was tested under dynamical and steady-state load conditions under load changing. Fig. 9 shows the experimental results for the source currents (i_{Sabc}) and the neutral current i_{Sn} under balanced and unbalanced load-current conditions. The experimental results for load neutral (i_{Ln}), filter neutral (i_{Cn}), and source neutral current (i_{Sn}) before and after filter operation are shown in Fig. 10.

Fig. 11 shows the experimental results for the load voltages for single- and three-phase forms before and after series APF operation at the PCC. Finally, the voltage and current harmonic compensation capability of the proposed UPQC control method is shown in Table III as experimental results and their THD levels. The THD levels are given before and after filter operation under the conventional and proposed SRF methods. The obtained results show that the proposed control method allows

TABLE III
EXPERIMENTAL RESULTS AND THD LEVELS OF VOLTAGE AND CURRENT WAVEFORMS AT THE PCC

		Before UPQC		After UPQC			
				Conventional		Proposed	
	Phases	Currents (A)	Voltages (V)	Currents (A)	Voltages (V)	Currents (A)	Voltages (V)
THD (%)	A	26,2	29.8	5,6	4,2	4,6	3,4
	B	26,4	32,6	5,5	4,5	4,5	4,0
	C	26,5	32,2	5,7	4,3	4.5	3,8

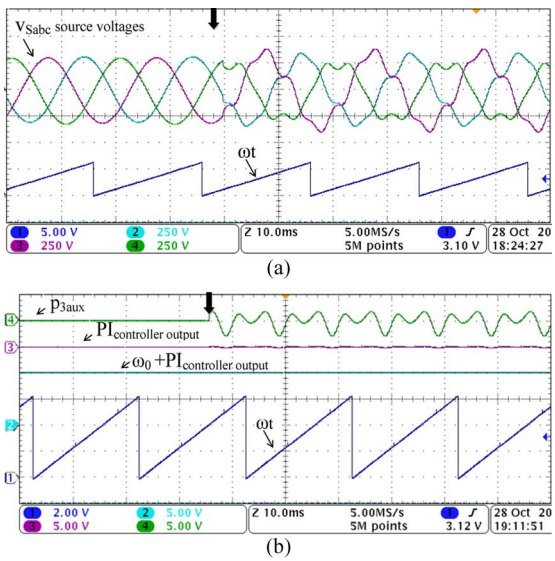

Fig. 12. Experimental results for the modified PLL algorithm under balanced and unbalanced conditions with distortions. (a) System voltages and ωt waveforms. (b) Modified PLL algorithm characteristic waveforms.

THD levels of 4.6% current and 3.4% voltage by mitigation of all harmonic components for phase a at the PCC.

Experimental results for the modified PLL algorithm under balanced and unbalanced conditions with distortions and characteristic waveforms are shown in Fig. 12. Fig. 13(a) shows the behavior of the proposed modified PLL algorithm when the utility frequency suddenly changes from 50 to 30 Hz. Experimental results for the modified PLL algorithm and characteristic waveforms are shown in Fig. 13(b). These waveforms show how the modified PLL algorithm provide good results even under supply frequency change and unbalanced and distorted load conditions.

The experimental results show that the harmonic compensation features of shunt and series APFs, by appropriate control of UPQC, can be done effectively. The shunt APF with reduced-current-measurement-based control method can compensate neutral, harmonic, and reactive currents effectively, in the unbalanced and distorted load conditions. However, the series APF can compensate load voltage harmonics and unbalances in order to protect sensitive loads connected the same PCC.

As shown in the results, the proposed control strategy provides better dynamic responses to load-current variation, and so, the stability of the UPQC control is enhanced. As a result, the proposed method is very effective and successful in harmonic compensation under unbalanced and distorted load conditions, as shown in the simulation and experimental results and the THD levels given in Tables II and III.

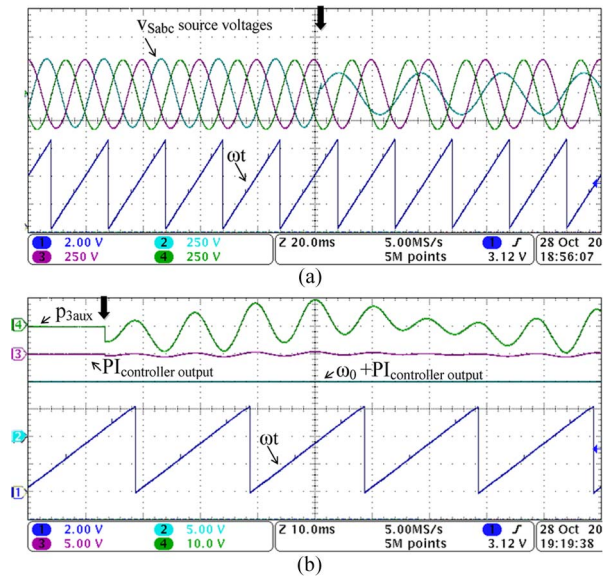

Fig. 13. Experimental results for the modified PLL algorithm under balanced conditions and when the utility frequency varies. (a) System voltages and ωt waveforms. (b) Modified PLL algorithm characteristic waveforms.

VII. CONCLUSION

This paper describes a new SRF-based control strategy used in the UPQC, which mainly compensates the reactive power along with voltage and current harmonics under nonideal mains voltage and unbalanced load-current conditions. The proposed control strategy uses only loads and mains voltage measurements for the series APF, based on the SRF theory. The conventional methods require the measurements of load, source, and filter currents for the shunt APF and source and injection transformer voltage for the series APF. The simulation results show that, when under unbalanced and nonlinear load-current conditions, the aforementioned control algorithm eliminates the impact of distortion and unbalance of load current on the power line, making the power factor unity. Meanwhile, the series APF isolates the loads and source voltage in unbalanced and distorted load conditions, and the shunt APF compensates reactive power, neutral current, and harmonics and provides three-phase balanced and rated currents for the mains. Experimental results obtained from a laboratory model of 10 kVA, along with a theoretical analysis, are shown to verify the viability and effectiveness of the proposed SRF-based UPQC control method.

REFERENCES

[1] L. Gyugyi and E. Strycula, "Active AC power filters," in *Conf. Rec. IEEE IAS Annu. Meeting*, Chicago, IL, Oct. 1976, pp. 529–535.
[2] H. Akagi and H. Fujita, "A new power line conditional for harmonic compensation in power systems," *IEEE Trans. Power Del.*, vol. 10, no. 3, pp. 1570–1575, Jul. 1995.
[3] H. Fujita and H. Akagi, "The unified power quality conditioner: The integration of series and shunt-active filters," *IEEE Trans. Power Electron.*, vol. 13, no. 2, pp. 315–322, Mar. 1998.

[4] H. Akagi, E. H. Watanabe, and M. Aredes, *Instantaneous Power Theory and Applications to Power Conditioning*. Hoboken, NJ: Wiley-IEEE Press, Apr. 2007.

[5] D. Graovac, V. Katic, and A. Rufer, "Power quality problems compensation with universal power quality conditioning system," *IEEE Trans. Power Del.*, vol. 22, no. 2, pp. 968–976, Apr. 2007.

[6] B. Han, B. Bae, H. Kim, and S. Baek, "Combined operation of unified power-quality conditioner with distributed generation," *IEEE Trans. Power Del.*, vol. 21, no. 1, pp. 330–338, Jan. 2006.

[7] M. Aredes, "A combined series and shunt active power filter," in *Proc. IEEE/KTH Power Tech Conf.*, Stockholm, Sweden, Jun. 1995, pp. 18–22.

[8] Y. Chen, X. Zha, and J. Wang, "Unified Power Quality Conditioner (UPQC): The theory, modeling and application," in *Proc. PowerCon*, 2000, vol. 3, pp. 1329–1333.

[9] F. Z. Peng, J. W. McKeever, and D. J. Adams, "A power line conditioner using cascade multilevel inverters for distribution systems," *IEEE Trans. Ind. Appl.*, vol. 34, no. 6, pp. 1293–1298, Nov./Dec. 1998.

[10] A. Esfandiari, M. Parniani, A. Emadi, and H. Mokhtari, "Application of the unified power quality conditioner for mitigating electric arc furnace disturbances," *Int. J. Power Energy Syst.*, vol. 28, no. 4, pp. 363–371, 2008.

[11] M. Aredes, H. Akagi, E. H. Watanabe, E. V. Salgado, and L. F. Encarnacao, "Comparisons between the $p-q$ and $p-q-r$ theories in three-phase four-wire systems," *IEEE Trans. Power Electron.*, vol. 24, no. 4, pp. 924–933, Apr. 2009.

[12] K. H. Kwan, Y. C. Chu, and P. L. So, "Model-based H_∞ control of a unified power quality conditioner," *IEEE Trans. Ind. Electron.*, vol. 56, no. 7, pp. 2493–2504, Jul. 2009.

[13] S. Bhattacharya, D. M. Divan, and B. Banerjee, "Synchronous reference frame harmonic isolator using series active filter," in *Proc. 4th EPE*, Florence, Italy, 1991, vol. 3, pp. 030–035.

[14] S. Bhattacharya, T. M. Frank, D. M. Divan, and B. Banerjee, "Active filter system implementation," *IEEE Ind. Appl. Mag.*, vol. 4, no. 5, pp. 47–63, Sep./Oct. 1998.

[15] S. Bhattacharya and D. Divan, "Synchronous frame based controller implementation for a hybrid series active filter system," in *Conf. Rec. IEEE IAS Annu. Meeting*, 1995, pp. 2531–2540.

[16] G. D. Marques, V. F. Pires, M. Malinowski, and M. Kazmierkowski, "An improved synchronous reference frame method for active filters," in *Proc. Int. Conf. Comput. Tool, EUROCON*, Sep. 2007, pp. 2564–2569.

[17] S. Bhattacharya, T. M. Frank, D. M. Divan, and B. Banerjee, "Parallel active filter system implementation and design issues for utility interface of adjustable speed drive systems," in *Conf. Rec. 31st IEEE IAS Annu. Meeting*, 1996, pp. 1032–1039.

[18] G. D. Marques, "A comparison of active power filter control methods in unbalanced and non-sinusoidal conditions," in *Proc. 24th IEEE IECON*, 1998, vol. 1, pp. 444–449.

[19] V. Kaura and V. Blasko, "Operation of a phase locked loop system under distorted utility conditions," *IEEE Trans. Ind. Appl.*, vol. 33, no. 1, pp. 58–63, Jan./Feb. 1997.

[20] L. R. Limongi, R. Bojoi, C. Pica, F. Profumo, and A. Tenconi, "Analysis and comparison of phase locked loop techniques for grid utility applications," in *Proc. PCC APOS*, Nagoya, Japan, 2007, pp. 674–681.

[21] M. Aredes, K. Heumann, and E. H. Watanabe, "An universal active power line conditioner," *IEEE Trans. Power Del.*, vol. 13, no. 2, pp. 545–551, Apr. 1998.

[22] L. F. C. Monteiro, M. Aredes, and L. A. M. Neto, "A control strategy for unified power quality conditioner," in *Proc. IEEE Int. Symp. Ind. Electron.*, Jun. 2003, vol. 1, pp. 391–396.

[23] F. Z. Peng, G. W. Ott, and D. J. Adams, "Harmonic and reactive power compensation on the generalized instantaneous reactive power theory for three-phase four-wire systems," *IEEE Trans. Power Electron.*, vol. 13, no. 6, pp. 1174–1181, Nov. 1998.

[24] A. D. Le Roux, J. A. Du Toit, and J. H. R. Enslin, "Integrated active rectifier and power quality compensator with reduced current measurement," *IEEE Trans. Ind. Electron.*, vol. 46, no. 3, pp. 504–511, Jun. 1999.

[25] T. Takeshita and N. Matsui, "Control of active filters using source current detection," in *Proc. 29th Annu. Conf. IEEE Ind. Electron. Soc.*, 2003, vol. 2, pp. 1515–1520.

[26] K. Chatterjee, B. G. Fernandes, and G. K. Dubey, "An instantaneous reactive volt-ampere compensator and harmonic suppressor system," *IEEE Trans. Power Electron.*, vol. 14, no. 2, pp. 381–392, Mar. 1999.

[27] E. Ozdemir, M. Ucar, M. Kesler, and M. Kale, "The design and implementation of a shunt active power filter based on source current measurement," in *Proc. IEEE IEMDC*, Antalya, Turkey, 2007, pp. 608–613.

[28] E. Ozdemir, M. Ucar, M. Kesler, and M. Kale, "A simplified control algorithm for shunt active power filter without load and filter current measurement," in *Proc. 32nd IEEE IECON*, Paris, France, 2006, pp. 2599–2604.

[29] V. Khadkikar and A. Chandra, "A new control philosophy for a Unified Power Quality Conditioner (UPQC) to coordinate load-reactive power demand between shunt and series inverters," *IEEE Trans. Power Del.*, vol. 23, no. 4, pp. 2522–2534, Oct. 2008.

[30] M. Kesler, "Synchronous reference frame based application design and analysis of unified power quality conditioner," Ph.D. dissertation, Kocaeli Univ., Kocaeli, Turkey, 2010.

[31] M. Basu, S. P. Das, and G. K. Dubey, "Investigation on the performance of UPQC-Q for voltage sag mitigation and power quality improvement at a critical load point," *IET Gener. Transm. Distrib.*, vol. 2, no. 3, pp. 414–423, May 2008.

[32] S. A. O. da Silva and R. A. Modesto, "A comparative analysis of SRF-based controllers applied to active power line conditioners," in *Proc. 34th IEEE IECON*, 2008, pp. 405–410.

[33] S. A. O. da Silva, P. F. Donoso-Garcia, P. C. Cortizo, and P. F. Seixas, "A comparative analysis of control algorithms for three-phase line-interactive UPS systems with series-parallel active power-line conditioning using SRF method," in *Proc. 31st IEEE Annu. PESC*, 2000, vol. 2, pp. 1023–1028.

[34] V. Khadkikar and A. Chandra, "A novel structure for three-phase four-wire distribution system utilizing Unified Power Quality Conditioner (UPQC)," *IEEE Trans. Ind. Appl.*, vol. 45, no. 5, pp. 1897–1902, Sep./Oct. 2009.

[35] A. Luo, Z. Shuai, W. Zhu, and Z. J. Shen, "Combined system for harmonic suppression and reactive power compensation," *IEEE Trans. Ind. Electron.*, vol. 56, no. 2, pp. 418–428, Feb. 2009.

[36] P. Rodríguez, J. Pou, J. Bergas, J. I. Candela, R. P. Burgos, and D. Boroyevich, "Decoupled double synchronous reference frame PLL for power converters control," *IEEE Trans. Power Electron.*, vol. 22, no. 2, pp. 584–592, Mar. 2007.

[37] C. H. da Silva, R. R. Pereira, L. E. B. da Silva, G. Lambert-Torres, B. K. Bose, and S. U. Ahn, "A digital PLL scheme for three-phase system using modified synchronous reference frame," *IEEE Trans. Ind. Electron.*, vol. 57, no. 11, pp. 3814–3821, Nov. 2010.

[38] J. M. Espi Huerta, J. Castello, J. R. Fischer, and R. Garcia-Gil, "A synchronous reference frame robust predictive current control for three-phase grid-connected inverter," *IEEE Trans. Ind. Electron.*, vol. 57, no. 3, pp. 954–962, Mar. 2010.

[39] R. M. Santos Filho, P. F. Seixas, P. C. Cortizo, L. A. B. Torres, and A. F. Souza, "Comparison of three single-phase PLL algorithms for UPS applications," *IEEE Trans. Ind. Electron.*, vol. 55, no. 8, pp. 2923–2932, Aug. 2008.

Metin Kesler was born in Gumushane, Turkey. He received the M.Sc. and Ph.D. degrees in electrical education from Kocaeli University, Kocaeli, Turkey, in 2005 and 2010, respectively.

He has been a Lecturer Dr. with the Computer Engineering Department, Faculty of Engineering, Bilecik University, Bilecik, Turkey. His research interests are power electronics, DSP-based design and control systems, active power filters, and power quality.

Engin Ozdemir (S'98–M'00–SM'07) was born in Izmit, Turkey. He received the M.Sc. degree in electrical engineering from Yildiz Technical University, Istanbul, Turkey, in 1994 and the Ph.D. degree in electrical engineering from Kocaeli University, Kocaeli, Turkey, in 1999.

In 2007, he was a Visiting Professor at the University of Tennessee, Knoxville, where he also worked on a project at the Oak Ridge National Laboratory, Oak Ridge, TN. Since 2008, he has been an Associate Professor with the Faculty of Technical Education, Kocaeli University. His research interests are renewable energy system and power electronics interface, multilevel converters, active power filters, and power quality.