Genetic Algorithm-Based Meter Placement for Static Estimation of Harmonic Sources

Ashwani Kumar, Biswarup Das, *Member, IEEE*, and Jaydev Sharma

***Abstract*—In this paper, a method based on genetic algorithm (GA) is proposed to solve the problem of optimal placement of meters for static estimation of harmonic sources in a power system. Based on the case studies undertaken in this work, it has been observed that the GA-based meter placement strategy always yields the same solution as obtained from the complete enumeration (CE) technique. Moreover, the solutions obtained by the proposed method are better than the other techniques proposed in the literature.**

***Index Terms*—Genetic algorithm, harmonics, power system.**

I. Introduction

DUE TO continuous proliferation of nonlinear loads, the amount of harmonic currents injected into the power system is also ever increasing. These injected harmonic currents propagate throughout the entire electrical network and distort the voltages at all the buses as well as the currents in all the lines of the system. Because of these distorted voltages and currents, different operational problems such as overheating and failure of equipment, false tripping of sensitive loads, misoperation of protective relays, interference with communication circuits etc. take place in the system [1]. As a result, there is a growing concern to limit the amount of harmonics in the system and out of this concern, harmonic standards have been formulated [2]. These standards generally require that the utility company must maintain near sinusoidal waveform of the voltages, whereas, the customer served must maintain the harmonic contents in its load current within certain limits. As the amount of bus voltage distortion depends on the harmonic content of the load currents, electric utilities are becoming more and more interested in determining the locations and magnitudes of these harmonic sources. This problem of determination of locations and magnitudes of the harmonic sources is generally termed as "reverse harmonic power flow problem [3]." Obviously, to solve this "reverse harmonic power flow problem," appropriate locations of the harmonic meters are very important, as the quality (i.e., the accuracy) of the estimation is a function of the number and locations of the measurements. Although various techniques for placing the meters optimally for fundamental frequency domain exist [4]–[6], not many methods are available for placing the harmonic meters optimally in a power system. However, in the past, some endeavors have been made in the literature in this direction.

Heydt [3] first presented a technique for designing the harmonic instrumentation points based on the condition number of the coefficient matrix. Subsequently, Heydt *et al.* [7] have presented a hybrid nonlinear least square method for static harmonic state estimation. However, in this method, a total of 23 measurements have been used for the sample 13-bus system and 63 measurements have been considered for the IEEE-38 bus system, thereby making the total cost of the harmonic measurements quite high. Farach and Grady [8] have developed a sequential technique for optimal sensor placement for under-determined case (number of measurements is less than the number of unknown quantities) of harmonic static state estimation. Their technique is based on the minimum variance approach, where the expected value of the sum of the squares of the differences between the estimated and the true variables is minimized. In this method, for an n-bus system with p measuring devices, only $\mathrm{p}(2\mathrm{n}+1-\mathrm{p})/2$ combinations of meter placement need to be checked. Nevertheless, for typical value of n and p, the value of $\mathrm{p}(2\mathrm{n}+1-\mathrm{p})/2$ can be quite large. Moreover, the sequential solution yields only a good approximate solution and the best solution can only be obtained by complete enumeration (CE) of all the possible combinations of meter placements. But CE technique for finding optimal meter placement is too exhaustive even for a moderate size of power system and hence cannot be implemented practically. Haili Ma and Girgis [9] have presented a meter placement methodology based upon the system error covariance analysis. This method is exhaustive and requires a large execution time for finding out the optimal locations of harmonic meters. Thus, an alternative method for deciding the optimal measuring locations, which gives the same locations as that obtained by the CE technique, is still needed.

To address the above mentioned need, in the present paper, a genetic algorithm-based method has been proposed to solve the problem of optimal meter placement for static harmonic estimation. For fitness evaluation of the genetic algorithm (GA) strings, the trace of the covariance matrix as described in [8] has been used in this work. It has been found that GA based technique always gives the same results as that obtained by the CE technique and is better than the sequential technique. The paper is organized as follows. In Section II the mathematical formulation of the problem is outlined. The subject matter of this section has been essentially taken from [8] and it is included in this paper only for the sake of completeness of the paper. In Section III GA based algorithm is presented in detail. In Section IV

Manuscript received September 22, 2003; revised April 25, 2004. Paper no. TPWRD-00483-2003.

A. Kumar is with the Electrical Engineering Department, Indian Institute of Technology, Roorkee and also with the National Institute of Technology, Hamirpur, Himachal Pradesh, India (e-mail: as123dee@iitr.ernet.in).

B. Das and J. Sharma are with the Electrical Engineering Department, Indian Institute of Technology, Roorkee, India (e-mail: biswafee@iitr.ernet.in; jaydsfee@iitr.ernet.in).

Digital Object Identifier 10.1109/TPWRD.2004.838520

0885-8977/$20.00 © 2005 IEEE

Elearnica Downloaded from http://www.elearnica.ir

results obtained in four test systems using CE technique, sequential technique and the proposed GA method are given.

II. Problem Formulation

In an n-bus power system, at any particular operating frequency, the bus voltages and the bus injection currents are related by

$$V_{\text{bus}} = Z_{\text{bus}} I_{\text{bus}} \tag{1}$$

where Z_{bus} is the bus-impedance matrix of the system.

Suppose that bus voltages and bus injection currents at certain buses are observed. Let these be denoted by the vectors V_o and I_o, respectively. Also, let V_u, I_u denote the vectors of voltages and currents respectively at the remaining unmeasured buses. Partition of (1) in terms of the observed and unobserved vectors yields

$$\begin{bmatrix} V_u \\ V_o \end{bmatrix} = \begin{bmatrix} Z_{uu} & Z_{uo} \\ Z_{ou} & Z_{oo} \end{bmatrix} \begin{bmatrix} I_u \\ I_o \end{bmatrix}. \tag{2}$$

Different approaches, such as the sensitivity analysis approach based on condition number [3], the minimum variance approach [8] and the Kalman filtering approach [9] have been proposed in the literature to solve for the best estimate $\hat{I}_u$ of I_u. In the present work the approach based on minimum variance criterion has been adopted for its simplicity and rigorous framework.

The basic objective of this method is to select the measurements (from the set of all possible measurement locations) that will minimize the expected value of the sum of squares of differences between estimated and actual parameter variables. Application of this minimum variance criterion to the problem of estimation of harmonic sources results in the following optimization problem:

$$\text{Minimize} \quad \left\{ \underset{\hat{\mathrm{I}}_{\mathrm{u}}}{\text{Min}} \left\{ \underset{\hat{I}_u}{\text{Min}} \; \{E(\hat{\mathrm{I}}_{\mathrm{u}} - \mathrm{I}_{\mathrm{u}})\}^2 \right\} \right. \tag{3}$$

with respect to the locations of I_o and V_o.

The above problem is solved in two steps. In the first step, a predicted current vector $\hat{I}_u$ is determined to minimize the value of the square of the difference between the unknown current vector and the true current injection vector I_u. In the second step, the best measurement locations, represented by I_o and V_o, that minimize the error due to the best linear predictor $\hat{I}_u$, are found. The theory needed to solve (3) following these two steps is given in detail in [8] and hence is not repeated here. It has been shown in [8] that the error involved in the static state estimation is minimum in the statistical sense when the trace of the covariance matrix $Cov(\hat{I}_u - I_u)$ is minimum. Therefore, the trace of the covariance matrix $Cov(\hat{I}_u - I_u)$ [8] has been chosen as an appropriate scalar fitness function to be used in GA in this work and is reproduced in (4) below.

$$Cov(\hat{I}_u - I_u) = \sigma_u^2 - \sigma_u^2 Z_{ou}^T \left(Z_{ou} \sigma_u^2 Z_{ou}^T \right)^{-1} Z_{ou} \sigma_u^2. \tag{4}$$

In the above expression, σ_u is a constant matrix representing *a priori* probability of existence of harmonic sources for the unknown (not measured) buses. This matrix is to be obtained by appropriately partitioning the matrix σ, which models the *a priori* probability of existence of harmonic sources at all the buses in the system. Hence, the objective of the above optimization problem is to determine the appropriate Z_{ou} matrix (i.e., to choose the appropriate measurement locations) so as to minimize the trace of the covariance matrix $Cov(\hat{I}_u - I_u)$.

III. GA-Based Meter Placement

The GA combines the adaptive nature of the natural genetics or the evolution of organs with function optimization. By simulating "the survival of the fittest" evolution strategy among chromosome (i.e., string) structures, the optimal string is searched by randomized information exchange. The major advantage of using the GA is that the solution obtained is globally optimal. Also GA is capable of obtaining the global solution of a wide variety of functions such as differentiable or nondifferentiable, linear or nonlinear, continuous or discrete, and analytical or procedural [10]. For the problem of optimal meter placement for static harmonic estimation, the global solution obtained using GA requires a lesser number of iterations compared to the CE technique and at the same time eliminates the disadvantage of the sequential meter placement technique, which gives suboptimal solution. The algorithm of the proposed GA technique is described in detail as follows.

Algorithm:

Step 1) Initially, the maximum number of generation, population size in each generation and the convergence criterion are decided. In the present work, maximum generations and the population size (i.e., the number of strings) for the first three test cases have been taken to be 60 and 10 and for the fourth test case these values are 300 and 10, respectively. The size of each string is taken to be a row vector with 'm' elements, where 'm' is the number of available meters to be placed in the power system for the measurement of harmonic data. Now, each string is actually denoting some combination of the meter locations. Hence, each element of each string should be initialized to represent a particular bus, where a meter is to be placed. This is accomplished as below.

A random number between 0 and 1 is first generated. Let this number be termed as x. This random number is subsequently transformed as $\mathrm{n}_1 = \text{round}((\mathrm{n_max} - 1) * x + 1)$, where 'n_max' stands for the total number of buses in the system and round(.) denotes the rounding off operation to the nearest integer. This number is then assigned to the first element of the first string of the present generation. Likewise, all the other remaining elements of the first string are assigned some node number. If in this process, two or more elements are assigned the same node number, then this string is recreated again (following the above procedure) such that all the elements in this string are distinct. Similarly, the other strings of the population in the present generation are also initialized.

Step 2) Using the fitness function given in (4) the fitness value of each string of the current generation is determined. For the determination of the fitness value of each string, σ_u and Z_{ou} should be known. As already mentioned, σ_u is a known diagonal matrix, which represents *a priori* probability of existence of harmonic sources for the unmeasured buses. Z_{ou} is the submatrix of Z_{bus} matrix as defined in (2). Now, each string denotes the set of the buses where the meters could be placed (refer to step 1). Therefore, at these buses the bus voltage and bus injection currents can be observed. Hence, these buses correspond to the set of 'observed buses' and the remaining system buses comprise the set of 'unobserved buses.' Once these two sets are known, the matrix Z_{ou} can be obtained by partitioning the Z_{bus} matrix appropriately as shown in (2). Once σ_u and Z_{ou} are known, the value of the fitness function can be determined from (4).

Step 3) In this step, the next generation of GA is created as described below. The two strings, whose fitness values are the lowest and the second lowest respectively, are directly copied to the next generation. Then, by performing crossover [10] on these two directly copied strings, another two strings for the next generation are created. To decide upon the crossover position, initially, a random number between 0 and 1 is generated. Let this number be termed as y. This random number is subsequently transformed as $\mathrm{n}_2 = \mathrm{round}((\mathrm{L}-2)*y+1)$, where 'L' stands for the size of each individual string. The crossover operation is then carried out at the 'n_2-th' position of the strings. If in this process of crossover, two or more elements of the newly create string are assigned the same node number, then this string is recreated again.

Thus, by the above methodology, only four strings of the next generation are created. The remaining six strings of the next generation are then created randomly following the procedure described in step 1 above. This step is further explained for generation 2 as given below. Here string 1 and string 2 are the two best strings obtained from generation 1. If the value of the crossover point n_2 is equal to unity (say), then the third and fourth strings after crossing over after element 1 of the strings 1 and 2 are as shown below.

Generation 2

1	4	6	String 1
3	9	8	String 2
1	9	8	String 3
3	4	6	String 4

Remaining strings are determined as explained in step 1.

:	:	:	
11	4	6	String 10

Step 4) If the best string does not change for two successive generations, then the mutation operator is applied to it. Since the coding of the strings is done in integer form, a random change of one of the elements of the best string is termed as mutation in this work. For this purpose, one of the elements of the string is changed randomly by adding either 1 or -1 to its current value such that the highest bus number limit, i.e., n_max and the lowest bus number limit (i.e., 1) are not violated. The value -1 plays an important role when the element undergoing mutation has the value equal to the highest bus number, i.e., n_max. For example in a fourteen-bus system the lowest bus number is 1 and the highest number is 14. If the current value of the element of the string undergoing mutation is 14 then the addition of 1 to it will violate the limit of the maximum bus number. Thus, in such a case, a value of -1 is added to this element. On the other hand, when the value of the element of the string to be undergoing mutation is unity, $+1$ is added to the value of this element such that the limit of lowest bus number is not violated. The new string thus created is then made into the fifth string of the current generation. The remaining five strings of the current generation are then created randomly following the procedure described in step 1 above. This step is further explained below. Suppose during the execution of GA, the best string for two successive generations is

1	10	6

Hence, this string is a suitable candidate for application of the mutation operator. Now, as explained above, the element to be altered (i.e., mutated) is selected randomly. If the first element is selected randomly for mutation then $+1$ is added to its present value (i.e., 1) as the addition of -1 to it will make the value of the element become equal to zero which, in turn, violates the lower limit of the bus number. The new string thus created by mutation will be

2	10	6

However, because of this mutation operation, if two or more elements are assigned the same node number, then this string is recreated again. However, it is to be noted that the above four steps are used only when two or more harmonic meters are to be placed optimally in the power system. For the placement of only one harmonic meter GA uses the steps from 1 to 3. Obviously, the crossover and mutation operation are not used for the placement of single harmonic meter.

Step 5) The execution of GA is terminated when the best string remains unchanged for three successive generations or the GA has been executed for the maximum number of generations. It has been observed from various test cases that this method always finds the optimal set of buses within the allowable maximum number of generations. The various steps of

the proposed GA technique as described above are illustrated more clearly with sample calculations presented in the Appendix.

IV. Case Studies

To test the effectiveness of the proposed GA based technique for optimal harmonic meter placement; simulation studies have been carried out in four different test systems. The results obtained by the proposed GA have been compared with those obtained by both CE and sequential techniques. The software utilized for simulating these three techniques (i.e., GA, CE, and sequential) has been developed under MATLAB environment [11].

Case 1—Fourteen Bus System: Fig. 1 shows the single line diagram and the locations of the nonlinear loads of this system. The complete data of this system are given in [12]. In this system, the harmonic sources are already known to be present at the buses 4, 5, 6, and 14. The matrix σ for this system has been assumed to be as σ = Diagonal (0.1,0.1,0.1,4,4,4,0.1,0.1,0.1,0.1,0.1,0.1,0.1,4). Table I shows the results for optimal meter placement obtained by the proposed GA technique as well as those obtained by using both CE and sequential techniques corresponding to the 5th harmonic order for this system. Now, in this table (and all the subsequent tables in this paper), there are altogether six columns. Explanations of second, third, and fourth columns are given below each table. The fifth column denotes the number of iterations (for GA, it is actually the number of generations) and the last column represents the time (in seconds) taken by each method. It is to be noted that in this work, a population size of ten has been taken in each generation of GA. From the results of Table I it is observed that when either one or two meters are to be placed, the locations indicated by all three methods (i.e., CE, sequential, and GA) are the same. For example, when only one meter is to be placed, all of these three methods show that the minimum trace value is obtained when the meter is placed at bus 5 and thus bus 5 is identified as the optimum location by all three methods. Similarly, when two meters are available for placement, all three methods indicate buses 5 and 6 to be the optimum locations. Moreover, it can be observed that when either one or two meters are to be placed, the computation effort needed by GA (in terms of total number of possibilities to be checked and the total time taken) is the most among these three methods. Hence, when either one or two meters are to be placed, GA may not be the best choice for finding out the optimum location(s). However, when three meters are to be placed, the sequential method identifies buses 5, 6, and 14 to be the desired locations. But as identified by the CE method, when the three meters are placed at buses 4, 5, and 13, the trace value is minimum and thus, this combination is the desired optimum location(s). This same combination (i.e., buses 4, 5, and 13) has also been identified by GA. Hence, in this case, the sequential method failed to find the optimum results, whereas, the GA has been able to identify the same set of buses as obtained by the CE technique. It is to be noted that the CE method would always find the optimum solution as it checks all the possible combinations of meter placement strategies exhaustively. Hence, in this case, GA is able to find out the optimal combination of buses, whereas, the sequential method fails to do so. Also, it is observed from Table I that the time taken (0.28 sec.) by the GA method is less than the corresponding value taken by the CE technique. Hence, it can be said that for placing three meters, GA can find out the optimal locations more efficiently compared to the CE technique.

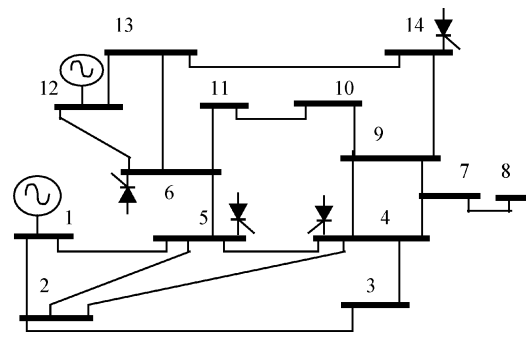

Fig. 1. One-line diagram of the 14-bus test system.

TABLE I
FOURTEEN-BUS SYSTEM, 5TH HARMONIC ORDER

Method	m	IB	MTV	Iterations	Time (s)
CE method	1	5	32.11	14	0.032
	2	5, 6	0.237	91	0.078
	3	4, 5, 13	0.117	364	0.375
Sequential method	1	5	32.11	14	0.048
	2	5, 6	0.237	27	0.079
	3	5, 6, 14	0.119	39	0.119
Genetic Algorithm	1	5	32.11	30	0.15
	2	5, 6	0.237	30	0.25
	3	4, 5, 13	0.117	40	0.28

m - number of meters, IB - identified buses, MTV - minimum trace value

Tables II, III, and IV show the results for optimal meter placement obtained by the proposed GA technique corresponding to the 7th, 11th, and 13th harmonic order respectively, for the same system. As in Table I, the optimal meter placement strategies have also been obtained by following both CE and sequential techniques corresponding to these three harmonic orders. These results are also shown in these three tables. From the results given in Tables I to IV, it is observed that in every case, when either one or two meters are to be placed, all the three methods identify correctly the optimal meter location(s), although GA may not be the ideal choice because of its high computation burden. However, when three meters are to be placed, GA is able to find out the optimal combination of buses more efficiently compared to the CE method, whereas, the sequential method fails to do so.

Case 2—Eighteen Bus System: Fig. 2 shows the single line diagram and the locations of the nonlinear loads of this system. Complete data of this system are given in [8], [13]. The matrix σ for this system is given in [8]. Table V shows the trace value as obtained from (4) for the different metering locations for this test case at the 5th harmonic order. From the results of Table V it is observed that when either one, two, or three meters are to be placed, the locations indicated by all three methods (i.e., CE, sequential, and GA) are the same. Moreover, the sequential technique is most efficient in terms of the computational burden

TABLE II
FOURTEEN-BUS SYSTEM, 7TH HARMONIC ORDER

Method	m	IB	MTV	Iterations	Time (s)
CE method	1	5	32.114	14	0.032
	2	5, 6	0.2255	91	0.078
	3	4, 5, 13	0.1105	364	0.35
Sequential method	1	5,	32.114	14	0.032
	2	5, 6	0.2255	27	0.062
	3	5, 6, 14	0.1188	39	0.109
Genetic Algorithm	1	5	32.114	30	0.15
	2	5, 6	0.2255	30	0.23
	3	4, 5, 13	0.1105	40	0.28

m - number of meters, IB - identified buses, MTV - minimum trace value

TABLE III
FOURTEEN-BUS SYSTEM, 11TH HARMONIC ORDER

Method	m	IB	MTV	Iterations	Time (s)
CE method	1	5	32.108	14	0.032
	2	5, 6	0.2024	91	0.094
	3	4, 5, 13	0.0979	364	0.36
Sequential method	1	5	32.108	14	0.047
	2	5, 6	0.2024	27	0.078
	3	5, 6, 14	0.1172	39	0.109
Genetic Algorithm	1	5	32.108	30	0.15
	2	5, 6	0.2024	30	0.23
	3	4, 5, 13	0.0979	40	0.27

m - number of meters, IB - identified buses, MTV - minimum trace value

TABLE IV
FOURTEEN-BUS SYSTEM, 13TH HARMONIC ORDER

Method	m	IB	MTV	Iterations	Time (s)
CE method	1	5	32.111	14	0.032
	2	5, 6	0.1914	91	0.078
	3	4, 5, 13	0.0956	364	0.35
Sequential method	1	5	32.111	14	0.032
	2	5, 6	0.1914	27	0.063
	3	5, 6, 14	0.1165	39	0.109
Genetic Algorithm	1	5	32.111	30	0.14
	2	5, 6	0.1914	30	0.21
	3	4, 5, 13	0.0956	40	0.27

m - number of meters, IB - identified buses, MTV - minimum trace value

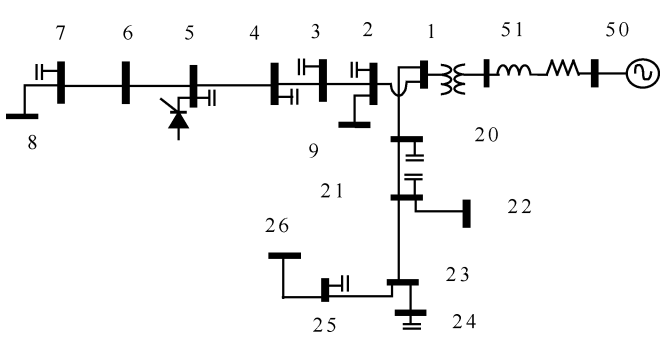

Fig. 2. One-line diagram of the 18-bus test system.

needed. However, when four meters are to be placed, the sequential method identifies buses 4, 20, 6, and 23 to be the desired locations. But as identified by the CE, when four meters are placed at buses 2, 24, 9, and 25, the trace value is minimum

TABLE V
EIGHTEEN-BUS SYSTEM, 5TH HARMONIC ORDER

Method	m	IB	MTV	Iterations	Time (s)
CE method	1	4	31.198	18	0.032
	2	4, 20	24.116	153	0.172
	3	4, 20, 6	18.400	816	1.3
	4	2, 24, 9, 25	4.356	3060	6.18
Sequential Method	1	4	31.198	18	0.063
	2	4, 20	24.116	35	0.094
	3	4, 20, 6	18.400	51	0.15
	4	4, 20, 6, 23	13.344	66	0.18
Genetic Algorithm	1	4	31.198	30	0.17
	2	4, 20	24.116	30	0.26
	3	4, 20, 6	18.400	40	1.1
	4	2, 24, 9, 25	4.356	50	1.64

m - number of meters, IB - identified buses, MTV - minimum trace value

TABLE VI
EIGHTEEN-BUS SYSTEM, 7TH HARMONIC ORDER

Method	m	IB	MTV	Iterations	Time (s)
CE method	1	4	31.114	18	0.062
	2	4, 20	23.938	153	0.156
	3	4, 20, 6	18.305	816	1.2
	4	4, 9, 23, 2	11.713	3060	6.12
Sequential Method	1	4	31.114	18	0.047
	2	4, 20	23.938	35	0.078
	3	4, 20, 6	18.305	51	0.125
	4	4, 20, 6, 23	13.375	66	0.172
Genetic Algorithm	1	4	31.114	30	0.17
	2	4, 20	23.938	30	0.26
	3	4, 20, 6	18.305	40	1.1
	4	4, 9, 23, 2	11.713	50	1.64

m - number of meters, IB - identified buses, MTV - minimum trace value

and thus, this combination is the desired optimum location(s). This same combination (i.e., buses 2, 24, 9, and 25) has also been identified by GA. Hence, in this case also, the sequential method failed to find the optimum results, whereas, the GA has been able to identify the same set of buses as obtained by the CE technique. Moreover, the computational effort needed by the CE technique is significantly more (more than three times) than that taken by the GA technique for finding the optimum locations.

Optimal meter locations for this system corresponding to the 7th, 11th, and 13th order of harmonics are shown in Tables VI, VII, and VIII, respectively. From the results given in Tables V to VIII, it is observed that in every case, when either one, two, or three meters are to be placed, all the three methods identify correctly the optimal meter location(s) and the sequential method is most efficient in terms of the computational effort. However, when four meters are to be placed, GA is able to find out the optimal combination of buses with significantly less computational burden as compared to the CE technique, whereas, the sequential method fails to do so.

Case 3—Thirty Bus System: Fig. 3 shows the single line diagram and the locations of the nonlinear loads of this system. Complete line and bus data of this system are given in [14]. In this system, the harmonic sources have been assumed to be present at the buses 5, 7, 8, and 12. The matrix σ for this system has been taken as $\sigma =$

TABLE VII
EIGHTEEN-BUS SYSTEM, 11TH HARMONIC ORDER

Method	m	IB	MTV	Iterations	Time (s)
CE method	1	4	30.965	18	0.015
	2	4, 25	24.594	153	0.156
	3	4, 25, 6	18.634	816	1.2
	4	6, 7, 5, 1	6.0934	3060	6.09
Sequential Method	1	4	30.965	18	0.031
	2	4, 20	24.594	35	0.078
	3	4, 20, 6	18.634	51	0.11
	4	4, 20, 6, 23	13.554	66	0.172
Genetic Algorithm	1	4	30.965	30	0.17
	2	4, 25	24.594	30	0.26
	3	4, 25, 6	18.634	40	1.0
	4	6, 7, 5, 1	6.0934	50	1.6

m - number of meters, IB - identified buses, MTV - minimum trace value

TABLE VIII
EIGHTEEN-BUS SYSTEM, 13TH HARMONIC ORDER

Method	m	IB	MTV	Iterations	Time (s)
CE method	1	4	30.855	18	0.015
	2	4, 6	24.662	153	0.141
	3	4, 6, 23	18.677	816	1.2
	4	4, 24, 23, 22	8.6399	3060	6.14
Sequential Method	1	4	30.855	18	0.032
	2	4, 6	24.662	35	0.078
	3	4, 6, 23	18.677	51	0.125
	4	4, 6, 23, 3	13.690	66	0.172
Genetic Algorithm	1	4	30.855	30	0.17
	2	4, 6	24.662	30	0.26
	3	4, 6, 23	18.677	40	0.97
	4	4, 24, 23, 22	8.6399	50	1.53

m - number of meters, IB - identified buses, MTV - minimum trace value

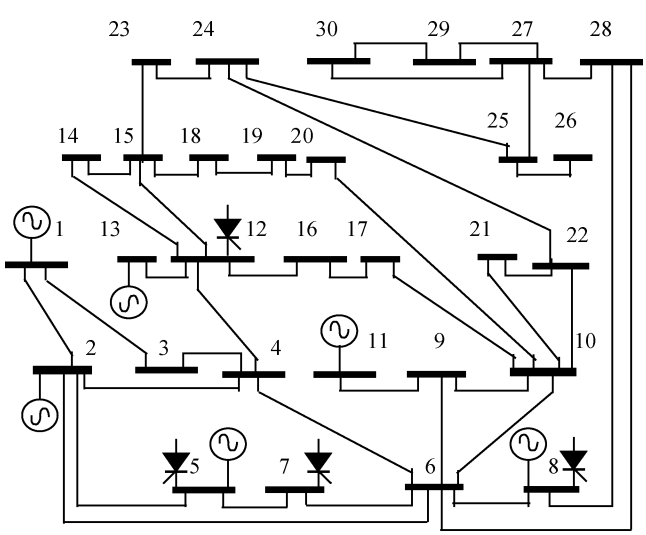

Fig. 3. One-line diagram of the thirty-bus test system.

Diagonal (0.1,0.1,0.1,0.1,4,0.1,4,4,0.1,0.1,0.1,4,0.1,0.1,0.1,0.1, 0.1,0.1,0.1,0.1,0.1,0.1,0.1,0.1,0.1,0.1,0.1,0.1,0.1,0.1).

Tables IX to XII show the results for optimal meter placement obtained by all of the three methods corresponding to the 5th, 7th, 11th, and 13th order of harmonics, respectively. From these results it is found that when only one meter is to be placed, all three methods find the optimum location correctly for all the four harmonic orders, and both the CE and sequential techniques are quite efficient as compared to the GA technique (in terms of the computational burden). However, when two meters are to be placed in the system, the proposed GA-based method is able to find the optimal locations correctly for 5th and 13th order of harmonics, whereas, the sequential method fails to do so. On the other hand, for the 7th and 11th order of harmonics, all the three methods find the optimum locations correctly. Thus, in this case also (i.e., when two meters are to be placed), there are some instances where the sequential method fails to find the correct optimal location(s), but the proposed GA-based method always finds them correctly, although the efficiency of the GA method (in terms of computational burden) is less than that of both the CE and sequential techniques. However, when three meters are to be placed, the GA-based method always finds the optimum locations at much less computational effort as compared to the CE technique, whereas, the sequential technique fails to identify the optimum locations correctly.

TABLE IX
THIRTY-BUS SYSTEM, 5TH HARMONIC ORDER

Method	m	IB	MTV	Iterations	Time (s)
CE method	1	5	32.292	30	0.062
	2	7, 8	0.6342	435	0.72
	3	7, 8, 12	0.045	4060	8.15
Sequential method	1	5	32.292	30	0.094
	2	5, 8	0.6529	59	0.16
	3	5, 8, 12	0.22	87	0.24
Genetic Algorithm	1	5	32.292	30	1.2
	2	7, 8	0.6342	40	1.62
	3	7, 8, 12	0.045	60	4.0

m - number of meters, IB - identified buses, MTV - minimum trace value

TABLE X
THIRTY-BUS SYSTEM, 7TH HARMONIC ORDER

Method	m	IB	MTV	Iterations	Time (s)
CE method	1	8	32.103	30	0.062
	2	7, 8	0.6989	435	0.70
	3	5, 13, 28	0.025	4060	7.83
Sequential Method	1	8	32.103	30	0.094
	2	8, 7	0.6989	59	0.141
	3	8, 7, 12	0.20	87	0.20
Genetic Algorithm	1	8	32.103	30	1.2
	2	7, 8	0.6989	40	1.62
	3	5, 13, 28	0.025	60	4.0

m - number of meters, IB - identified buses, MTV - minimum trace value

Case 4—One Hundred Forty Five Bus System: Complete line and bus data of this system are given in [15]. Due to space limitations, a single line diagram of the test system is not incorporated in the paper. The values of the matrix σ are determined from the bus load levels and from prior information about a particular bus being a harmonic bus. The matrix σ for this system has been taken as σ = Diagonal (0.1,0.1,0.1,0.1,0.1,0.1,0.1,0.1,0.1,0.1,0.1,0.1,0.1,0.1,0.1,0.1,0.1,0.1,0.1,0.1, 0.1,0.1,0.1,0.1,0.1,0.1,0.1,0.1,0.1,0.1,0.1,0.1,0.1,0.1,0.1,0.1,0.1,0.2, 0.2,0.1,0.1,0.1,0.1,0.1,0.1,0.1,0.1,0.1,0.1,0.1,0.1,0.1,0.1,0.1,0.1,0.3, 0.1,0.1,0.1,0.1,0.1,0.1,0.2,0.1,0.1,0.1,0.1,0.1,0.1,0.1,0.4,0.1,0.1, 0.1,0.1,0.1,0.1,0.1,0.4,0.1,0.1,0.1,0.4,0.173,0.173,0.173,0.141, 0.1,0.32,0.32,0.1,0.1,0.55,0.1,0.55,0.1,0.1,0.4,0.32,0.32,0.1,0.1, 0.1,0.32,0.1,0.32,0.32,0.1,0.141,0.7,0.63,0.1,0.1,0.77,0.77,0.9,

TABLE XI
THIRTY-BUS SYSTEM, 11TH HARMONIC ORDER

Method	m	IB	MTV	Iterations	Time (s)
CE method	1	8	32.295	30	0.063
	2	7, 8	1.6700	435	0.72
	3	7, 11, 28	0.122	4060	7.74
Sequential Method	1	8	32.295	30	0.062
	2	8, 7	1.6700	59	0.125
	3	8, 7, 12	0.247	87	0.20
Genetic Algorithm	1	8	32.295	30	1.2
	2	7, 8	1.6700	40	1.67
	3	7, 11, 28	0.122	60	3.89

m - number of meters, IB - identified buses, MTV - minimum trace value

TABLE XII
THIRTY-BUS SYSTEM, 13TH HARMONIC ORDER

Method	m	IB	MTV	Iterations	Time (s)
CE method	1	5	32.307	30	0.062
	2	7, 12	0.8343	435	0.74
	3	3, 7, 19	0.132	4060	8.17
Sequential Method	1	5	32.307	30	0.078
	2	5, 8	1.0984	59	0.125
	3	5, 8, 12	0.220	87	0.22
Genetic Algorithm	1	5	32.307	30	1.2
	2	7, 12	0.8343	40	1.65
	3	3, 7, 19	0.132	60	4.0

m - number of meters, IB - identified buses, MTV - minimum trace value

TABLE XIII
ONE HUNDRED FORTY FIVE-BUS SYSTEM, 5TH HARMONIC ORDER

Method	m	IB	MTV	Iterations	Time (s)
CE method	1	136	70.084	145	2.11
	2	136,140	54.465	10440	136.14
	3	134,136,140	40.638	497640	7084
Sequential Method	1	136	70.084	145	1.77
	2	136,140	54.465	289	3.68
	3	136,140,131	41.334	432	5.95
Genetic Algorithm	1	136	70.084	60	3.0
	2	136,140	54.465	300	3.8
	3	134,136,140	40.638	300	17.3

m - number of meters, IB - identified buses, MTV - minimum trace value

TABLE XIV
ONE HUNDRED FORTY FIVE-BUS SYSTEM, 7TH HARMONIC ORDER

Method	m	IB	MTV	Iterations	Time (s)
CE method	1	136	69.708	145	2.11
	2	136,140	54.069	10440	136.14
	3	134,136,140	40.220	497640	7120
Sequential Method	1	136	69.708	145	1.72
	2	136,140	54.069	289	3.72
	3	136,140,131	40.980	432	5.84
Genetic Algorithm	1	136	69.708	60	3.0
	2	136,140	54.069	300	3.8
	3	134,136,140	40.220	300	17.3

m - number of meters, IB - identified buses, MTV - minimum trace value

TABLE XV
ONE HUNDRED FORTY FIVE-BUS SYSTEM, 11TH HARMONIC ORDER

Method	m	IB	MTV	Iterations	Time (s)
CE method	1	136	69.883	145	2.11
	2	136,140	54.031	10440	136.14
	3	134,136,140	40.160	497640	7200
Sequential Method	1	136	69.883	145	1.72
	2	136,140	54.031	289	3.72
	3	136,140,131	40.650	432	5.82
Genetic Algorithm	1	136	69.883	60	3.0
	2	136,140	54.031	300	3.8
	3	134,136,140	40.160	300	17.3

m - number of meters, IB - identified buses, MTV - minimum trace value

TABLE XVI
ONE HUNDRED FORTY FIVE-BUS SYSTEM, 13TH HARMONIC ORDER

Method	m	IB	MTV	Iterations	Time (s)
CE method	1	136	70.166	145	2.11
	2	136,140	54.171	10440	136.14
	3	134,136,140	40.271	497640	7240
Sequential Method	1	136	70.166	145	1.72
	2	136,140	54.171	289	3.72
	3	136,140,131	40.458	432	5.82
Genetic Algorithm	1	136	70.166	60	3.0
	2	136,140	54.171	300	3.8
	3	134,136,140	40.271	300	17.3

m - number of meters, IB - identified buses, MTV - minimum trace value

0.32,0.1,0.1,1.0,1.0,1.0,1.3,1.6,0.7,0.92,0.63,0.1,1.0,0.1,0.1,0.1, 1.8,0.1,1.8,2.8,0.9,0.1,2.83,1.0,4,1.2,0.1,4.3,2,2.25,2,0.9,1.8,1.0).

Tables XIII to XVI show the results for optimal meter placement obtained by all of the three methods corresponding to the 5th, 7th, 11th, and 13th order of harmonics, respectively. From these results it is found that when either one or two meters are to be placed, all three methods find the optimum location correctly for all four harmonic orders, and the sequential technique is most efficient among these three methods (in terms of the computational burden). However, when three meters are to be placed in the system, the sequential method fails to find the true optimal combination, whereas the proposed GA technique finds the optimal locations at much less computational burden compared to the CE method.

From the results obtained in the above four test systems, it is observed that the proposed GA-based method always finds the optimal locations of the harmonic meters in the system. Now, it has been shown in [7], [8] that the estimation of the harmonic injection currents is very accurate to their true values when the data used for estimation is measured from the optimally placed meters. Thus, the GA-based meter placement method has an edge over the other two methods when estimation accuracy is of foremost importance.

V. CONCLUSION

In this work, a GA-based technique has been proposed to place meters optimally for estimating and identifying the unknown harmonic sources. The performance of the proposed technique has been compared with those of CE and sequential

TABLE A.I
DETAILS OF GENERATION 1 OF GA

String No.	Meter Locations at buses			Fitness Value
1	2	12	3	25.7078
2	1	4	8	30.1942
3	5	11	9	15.1357
4	13	10	2	16.1295
5	14	4	10	0.1891
6	1	9	12	29.0128
7	12	9	1	29.0128
8	9	10	5	15.0099
9	8	3	11	31.6909
10	4	9	5	14.9305

TABLE A.II
DETAILS OF GENERATION 2 OF GA

String No.	Meter Locations at buses			Fitness Value
1	14	4	10	0.1891
2	4	9	5	14.9305
3	14	9	5	0.3166
4	13	2	12	16.0912
5	1	8	5	19.0912
6	4	2	9	29.5810
7	8	4	14	15.2107
8	7	6	8	31.0087
9	10	5	13	0.1886
10	9	11	12	28.4780

TABLE A.III
DETAILS OF GENERATION 3 OF GA

String No.	Meter Locations at buses			Fitness Value
1	10	5	13	0.1886
2	14	4	10	0.1891
3	10	13	7	16.2111
4	14	4	13	0.1495
5	14	6	8	0.2889
6	3	8	6	15.7606
7	10	6	7	20.2236
8	9	4	13	0.3737
9	11	1	4	16.8636
10	10	2	12	25.9066

techniques in four different test systems. Based on these studies, the major conclusions of this work are

a) The proposed GA-based method always finds the optimal meter locations while the sequential technique can guarantee only near optimal solutions.
b) When the number of meters available for placement and/or the size of the system increases, the superiority of GA over the sequential technique (in term of the capability of finding out the global optimum) also increases. Moreover, in these cases, GA is capable of finding out the optimum combination in significantly less computational time as compared to the CE technique.

TABLE A.IV
DETAILS OF GENERATION 4 OF GA

String No.	Meter Locations at buses			Fitness Value
1	14	4	13	0.1495
2	10	5	13	0.1886
3	14	4	13	0.1495
4	10	5	13	0.1886
5	3	8	10	31.4771
6	12	9	4	16.0906
7	14	9	4	1.1998
8	8	3	13	18.2080
9	14	10	13	16.1659
10	1	4	5	16.2168

TABLE A.V
DETAILS OF GENERATION 5 OF GA

String No.	Meter Locations at buses			Fitness Value
1	14	4	13	0.1495
2	10	5	13	0.1886
3	14	4	13	0.1495
4	10	5	13	0.1886
5	14	5	13	0.1240
6	5	10	12	9.9710
7	4	11	12	10.0559
8	3	8	4	30.7632
9	2	5	8	18.6732
10	12	6	3	10.0706

APPENDIX

For better explanation, the sample calculations as carried out by the proposed GA technique for placing three meters in the IEEE 14 bus system [12] are described below.

As explained in step 1 of Section III, the strings of the first generation are created randomly and subsequently, the corresponding fitness values of each string of the whole population is determined by using the fitness function given in (4) as described in step 2 of Section III. The generation 1 and the corresponding fitness value of the individual string in generation 1 are given in Table A.I.

After generation 1, generation 2 is generated following step 3 of the algorithm in Section III. As described, initially the best two strings of generation 1 (i.e., string number 5 and 10) are copied directly into the second generation. Subsequently, for generating next two strings i.e., string number 3 and 4 of the generation 2, a random number n_2 (as described in step 3), which decides the point of crossover, is generated. In this case, the value of n_2 has been generated to be 1 (i.e., the crossover between the best two strings of generation 1 is to be performed after the first bit from the left-hand side). Accordingly, string 3 in generation 2 has been generated to be (14, 9, 5) (shown in Table A.II) and string 4 is supposed to be generated as (4, 4, 10). However, as bus 4 is appearing twice in string 4, it is rejected and another fresh string is generated following step 3. Remaining six strings of generation 2 are generated randomly. The fitness value of each string in generation 2 is shown in Table A.II.

Continuing with the same procedure, generation 3 and 4 have been created and the details of these two generations are shown in Table A.III and Table A.IV, respectively. It is to be noted that for both these cases, the crossover has been performed after

the second bit from the left-hand side (i.e., $n_2 = 2$ has been calculated randomly).

Similarly, the first four strings of generation 5 have been created from generation 4 (with $n_2 = 2$ created randomly). Now, it is observed that the best string (14, 4, 13) remains the same for the successive generations 4 and 5. As a result, the mutation operator (as described in step 4) has been applied. For this purpose, a random number has been created to determine the bit to be undergoing mutation. In this case, the middle bit has been chosen (randomly). As the bus number corresponding to this bit is 4, a value of $+1$ has been added to it and thus, the new string becomes as (14, 5, 13). This string now becomes the fifth string of generation 5 (refer Table A.V). The rest of the five strings in this generation are created randomly as described already. Now, had the left-most bit been chosen instead of the middle bit, then a value of -1 would have been added to it. Adding $+1$ to it would make this value to be equal to 15 which violates the upper limit of the bus number. Similarly, the subsequent generations of GA are carried out.

REFERENCES

[1] J. Arrillaga, D. Bradley, and D. Bodger, *Power System Harmonics*. New York: John Wiley & Sons, 1985.

[2] *IEEE Recommended Practice and Requirements for Harmonic Control in Electrical Power System*, IEEE Std 519-1992.

[3] G. T. Heydt, "Identification of harmonic sources by a state estimation technique," *IEEE Trans. Power Del.*, vol. 4, no. 1, pp. 569–575, Jan. 1989.

[4] M. E. Baran and A. W. Kelly, "State estimation for real-time monitoring of distribution systems," *IEEE Trans. Power Syst.*, vol. 9, no. 3, pp. 1601–1609, Aug. 1994.

[5] L. Haijun, Y. David, and C. D. Hsiao, "A heuristic meter placement method for load estimation," *IEEE Trans. Power Syst.*, vol. 17, no. 3, pp. 913–917, Aug. 2002.

[6] W. Haibin and N. N. Schulz, "A revised branch-based distribution system state estimation algorithm and meter placement impact," *IEEE Trans. Power Syst.*, vol. 19, no. 1, pp. 207–213, Feb. 2004.

[7] M. Najjar and G. T. Heydt, "A hybrid nonlinear-least squares estimation of harmonic signal levels in power systems," *IEEE Trans. Power Del.*, vol. 6, no. 1, pp. 282–288, Jan. 1991.

[8] J. E. Farach, W. M. Grady, and A. Arapostathis, "An optimal procedure for placing sensors and estimating the locations of harmonic sources in power system," *IEEE Trans. Power Del.*, vol. 8, no. 3, pp. 1303–1310, Jul. 1993.

[9] H. Ma and A. A. Girgis, "Identification and tracking of harmonic sources in a power system using Kalman filtering," *IEEE Trans. Power Del.*, vol. 11, no. 3, pp. 1659–1665, Jul. 1996.

[10] D. E. Goldberg, *Genetic Algorithms in Search, Optimization and Machine Learning*: Pearson Education Asia, 2001.

[11] Mathwork Inc. MATLAB Software (Version 6.1)

[12] R. K. Hartana and G. G. Richards, "Harmonic source monitoring and identification using neural networks," *IEEE Trans. Power Syst.*, vol. 5, no. 4, pp. 1098–1104, Nov. 1990.

[13] W. M. Grady, M. J. Samotyj, and A. H. Noyola, "Minimizing network harmonic voltage distortion with an active power line conditioner," *IEEE Trans. Power Del.*, vol. 6, no. 4, pp. 1690–1697, Oct. 1991.

[14] Y. Wallach, *Calculations and Programs for Power System Networks*. Englewood Cliffs, N.J.: Prentice Hall, 1986.

[15] *http://www.ee.washington.edu/research/pstca/* [Online]

Ashwani Kumar was born in 1965 in India. He obtained the M.E in electrical engineering from Panjab University, Chandigarh, India, in 1990 with specialization in power system. Since 1991, he has been with Department of Electrical Engineering, National Institute of Technology, Hamirpur, India. At present he is on leave working on the Ph.D. degree under Q.I.P. scheme at Indian Institute of Technology, Roorkee, India.

His research interests are in the area of Power System state estimation and Power system Harmonics.

Biswarup Das (M'02) was born in 1966 in India. He obtained the Ph.D. degree in electrical engineering from Indian Institute of Technology (I.I.T) Kanpur, India in 1998 with specialization in electric power system.

Since 1998, he has been with the Department of Electrical Engineering, I.I.T., Roorkee, India and is presently serving as Assistant Professor in the same department. His research interests are in the area of distribution automation, FACTS, and power system harmonics.

Jaydev Sharma received the M.E. and Ph.D. degrees in electrical engineering from University of Roorkee, India, in 1971 and 1974, respectively.

Currently, he is a Professor in the Department of Electrical Engineering at the Indian Institute of Technology, Roorkee, India. He is actively involved in research in the area of power system planning and operation, security analysis and optimization, small hydroplant design and simulation, ANN, and fuzzy neural applications to power system. He has published many technical papers in journals/conferences.